6 1/4" CAPTURED SYSTEM DRAWING INDEX

SERIES #1

VERTICAL DETAILS

SHEET #	SHEET TITLE	REV.
1	Cover Sheet	
2	Elevations & Sections	
3	TYPICAL 2 3/4" MULLION DETAIL @ SPANDREL GLASS	
4	TYPICAL 2 3/4" JAMB MULLION DETAIL @ SPANDREL GLASS	
5	TYPICAL 2 3/4" MULLION DETAIL @ VISION GLASS	
6	TYPICAL 2 3/4" JAMB MULLION DETAIL-RIGHT SIDE	
7	TYPICAL 2 3/4" JAMB MULLION DETAIL-LEFT SIDE	
8	TYPICAL 90° CAPTURED OUTSIDE CORNER MULLION DETAIL @ VISION AREA	
9	TYPICAL 90° CAPTURED INSIDE CORNER MULLION DETAIL	
10	TYPICAL 2 3/4" JAMB MULLION DETAIL @ SPANDREL GLASS	
11	TYPICAL 90° CAPTURED OUTSIDE CORNER MULLION DETAIL @ ANCHOR	
12	TYPICAL 90° CAPTURED INSIDE CORNER MULLION DETAIL @ ANCHOR	

HORIZONTAL DETAILS

SHEET #	SHEET TITLE	REV.
13	TYPICAL PARAPET COPING DETAIL	
14	TYPICAL 2 3/4" HORIZONTAL DETAIL @ SPANDREL / VISION GLASS	
15	TYPICAL 2 3/4" HORIZONTAL DETAIL	
16	TYPICAL 2 3/4" HORIZONTAL DETAIL @ SPANDREL GLASS	
17	TYPICAL 3 7/8" STACK JOINT DETAIL	
18	TYPICAL 3 7/8" SLIP CONNECTION DETAIL	
19	TYPICAL 3 7/8" HARD STACK SILL DETAIL	
20	TYPICAL 2 3/4" HARD STACK SILL DETAIL	
21	TYPICAL 2 3/4" HORIZONTAL DETAIL @ SPANDREL GLASS W/ SPACER @ JAMB	
22	TYPICAL 3 7/8" STACK JOINT DETAIL W/ SPACER @ JAMB CONDITION	
23	TYPICAL 3 7/8" HARD STACK JOINT DETAIL W/ SPACER @ JAMB CONDITION	
24	TYPICAL 2 3/4" HARD STACK JOINT DETAIL W/ SPACER @ JAMB CONDITION	
25	TYPICAL PARTS LIST	

NO.	REVISION	ISSUE DATE	BY

AMERICAN PRODUCTS, INC. (API)
12157 W LINEBAUGH AVENUE #335
TAMPA, FL 33626
CONTACT: KERRI BEALS
PH (813) 925-0144
WWW.AMERICANPROD.COM

API AMERICAN PRODUCTS, INC.

PROJECT NAME: CW625U UNITIZED CURTAIN WALL SERIES #1

SHEET TITLE: TYPICAL 2 3/4" INDEX OF HORIZ & VERT

DRAWN BY: wpa

DATE:

SCALE: 6" = 1'-0"

SHEET #: 1

6 1/4" MULLION - CAPTURED SYSTEM
SERIES #1

SPANDREL

VISION

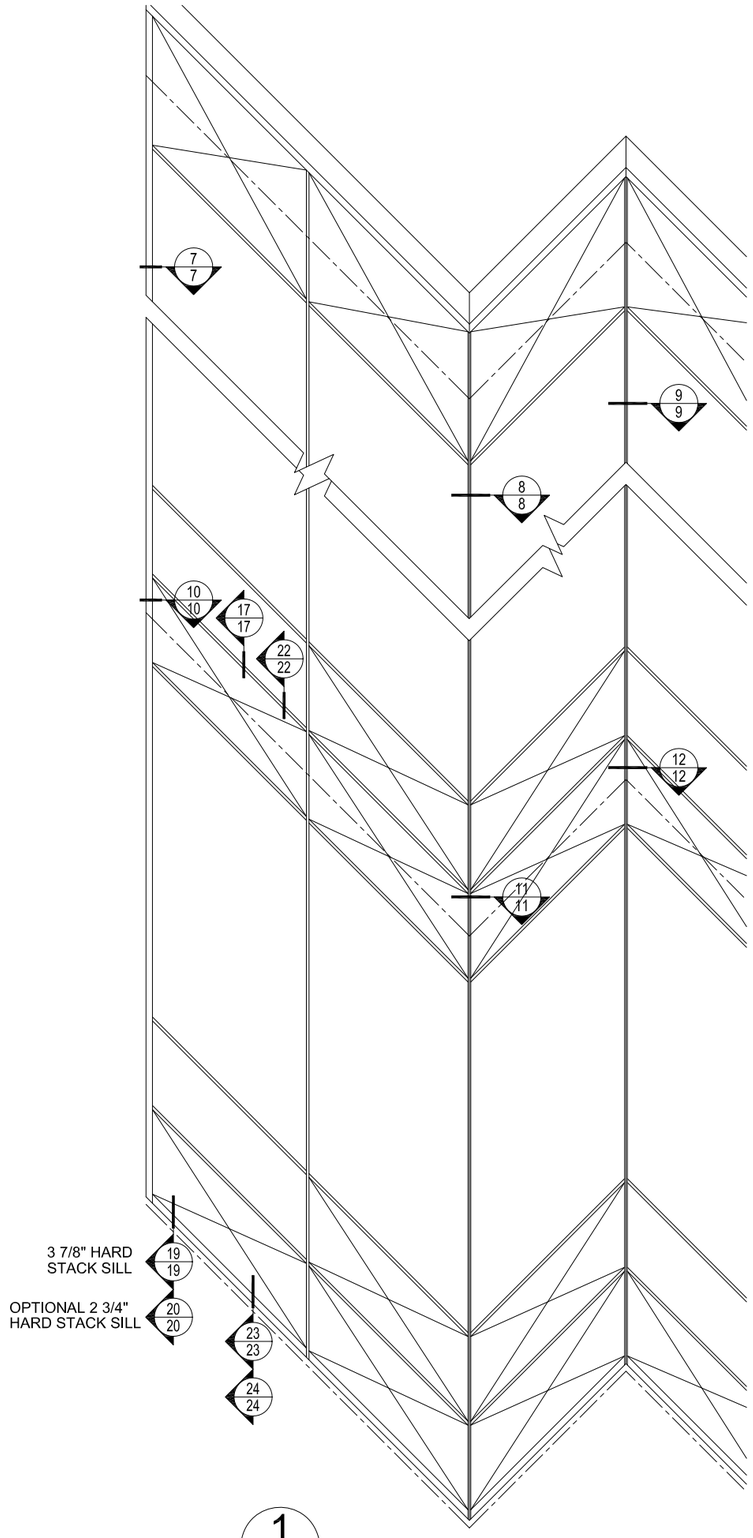

1/2

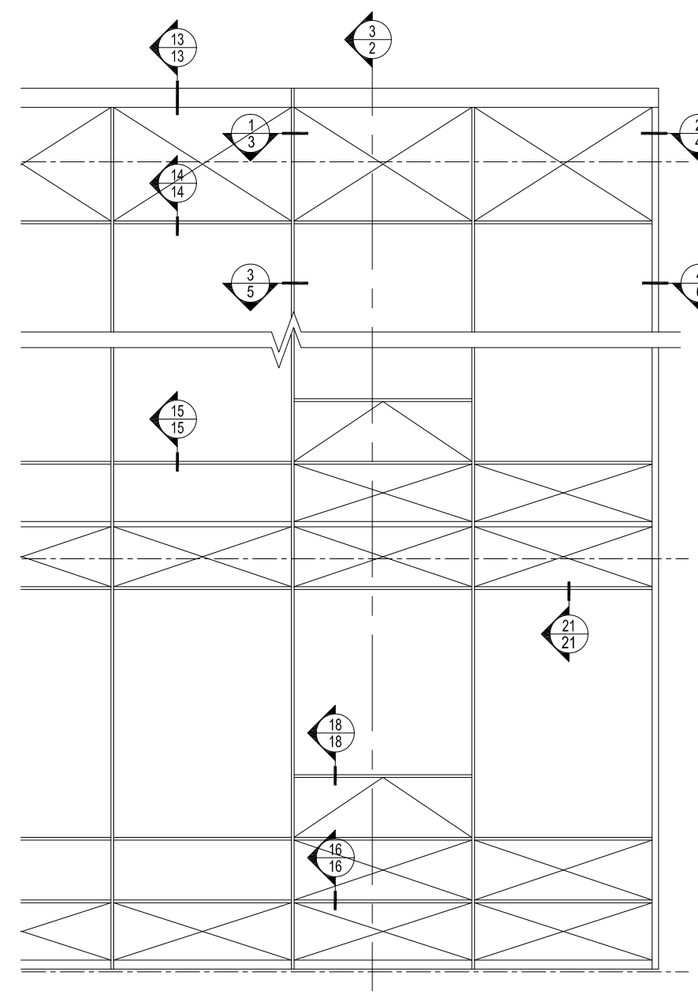

2/2

*DEAD LOAD CONNECTION (TYPICAL) (FOR SUSPENDED STACK JOINT AT FLOOR BELOW)

*SLIP CONNECTION (IF HARD STACK AT FLOOR BELOW)

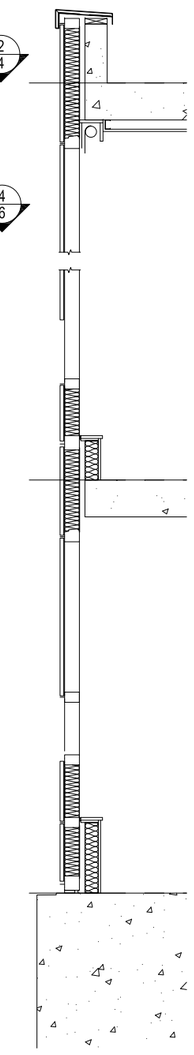

3/2

NO.	REVISION	ISSUE DATE	BY

AMERICAN PRODUCTS, INC. (API)
12157 W LINEBAUGH AVENUE #335
TAMPA, FL 33626
CONTACT: KERRI BEALS
PH (813) 925-0144
WWW.AMERICANPROD.COM

API AMERICAN PRODUCTS, INC.

PROJECT NAME: CW625U UNITIZED CURTAIN WALL SERIES #1

SHEET TITLE: TYPICAL 2 3/4" 6 1/4" MULLION SYSTEM

DRAWN BY: wpa

DATE:

SCALE: 6" = 1'-0"

SHEET #: 2

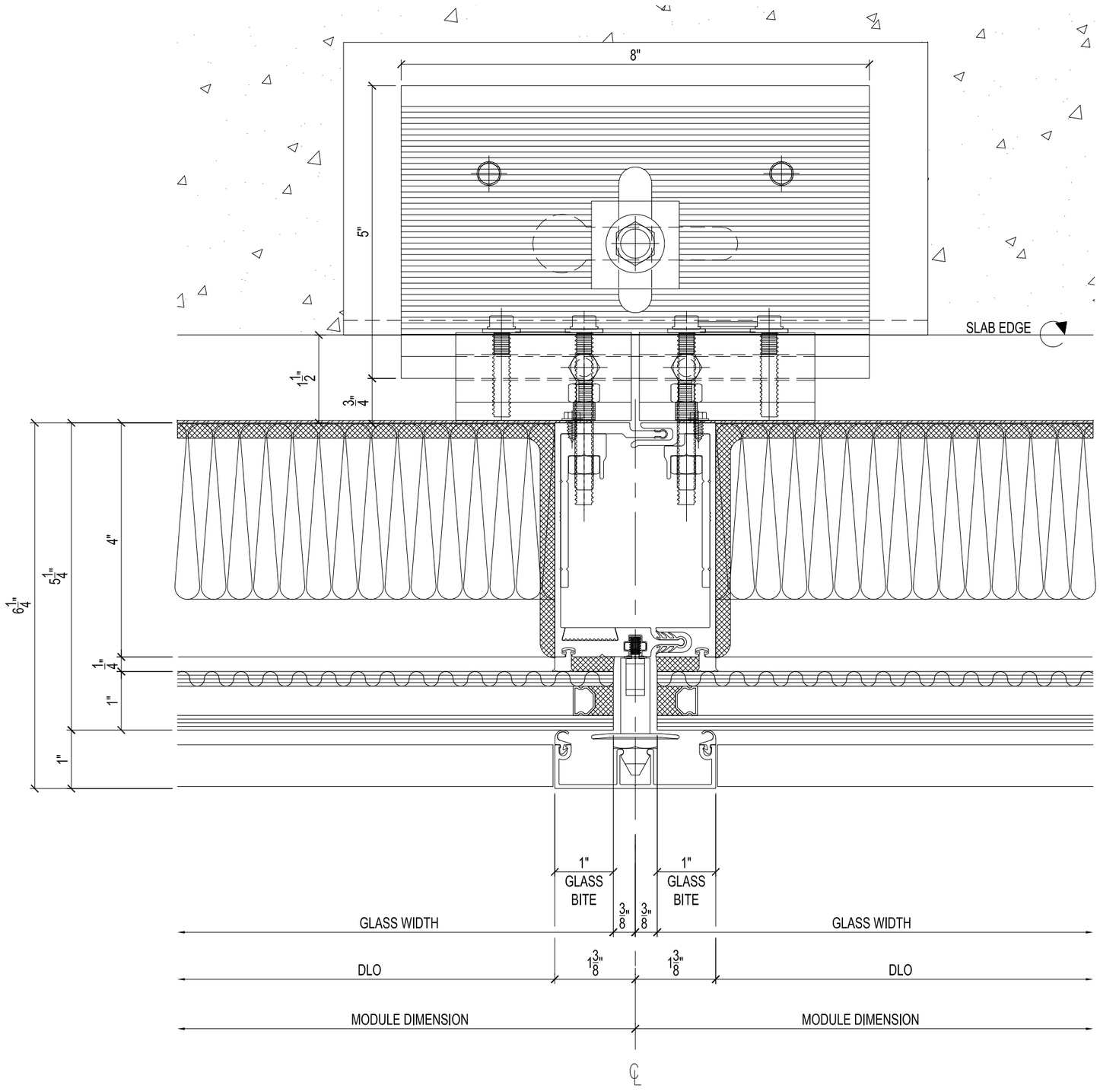

1/3 TYPICAL 2 3/4" MULLION DETAIL @ SPANDREL GLASS ALONG BRACKET

NO.	REVISION	ISSUE DATE	BY

AMERICAN PRODUCTS, INC. (API)
12157 W LINEBAUGH AVENUE #335
TAMPA, FL 33626
CONTACT: KERRI BEALS
PH (813) 925-0144
WWW.AMERICANPROD.COM

API
AMERICAN PRODUCTS, INC.

PROJECT NAME: CW625U UNITIZED CURTAIN WALL SERIES #1

SHEET TITLE: TYPICAL 2 3/4" MULLION DETAIL

DRAWN BY: wpa

DATE:

SCALE: 6" = 1'-0"

SHEET #: 3

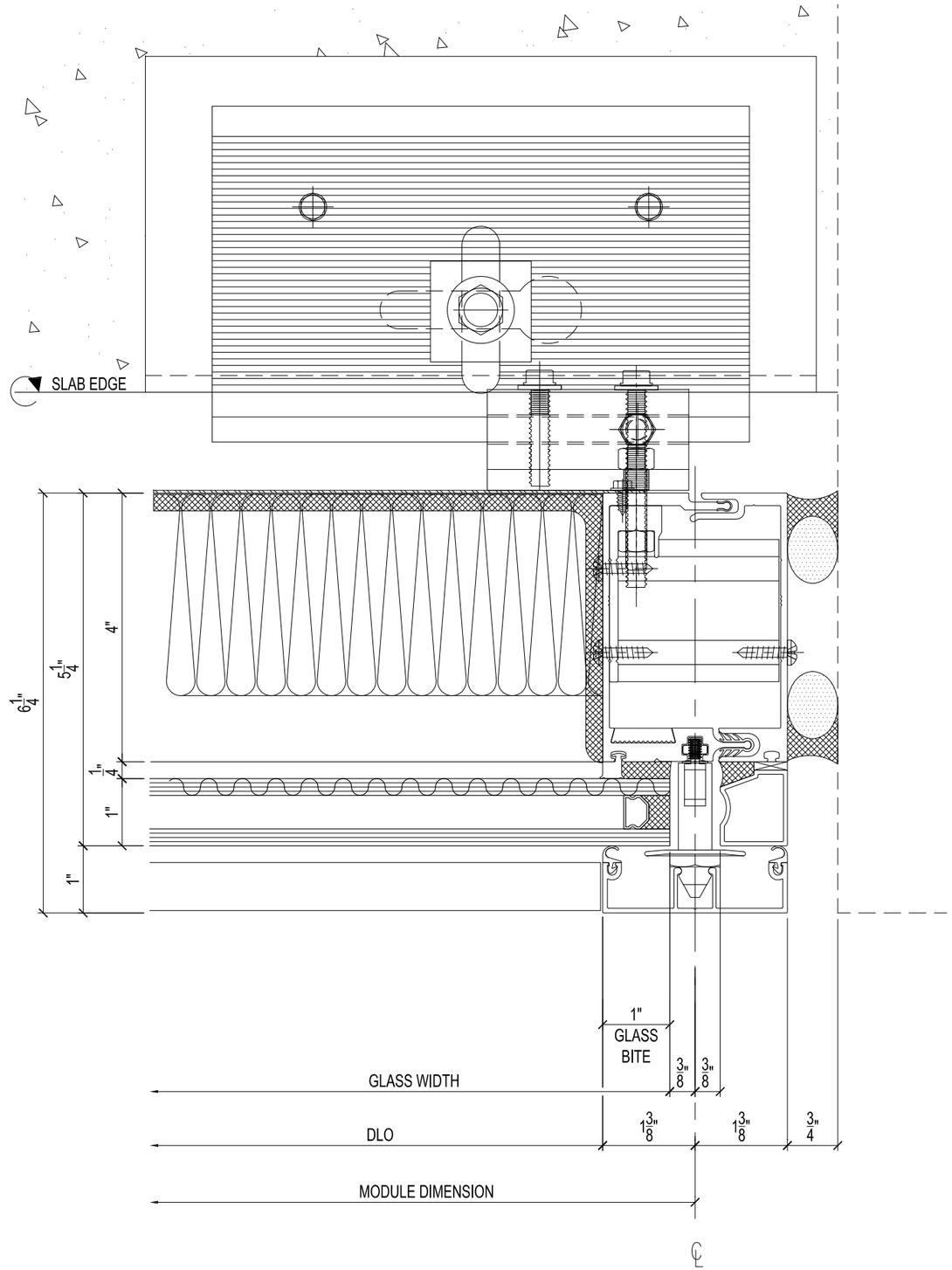

2/4 TYPICAL 2 3/4" JAMB MULLION DETAIL @ SPANDREL GLASS

NO.	REVISION	ISSUE DATE	BY

AMERICAN PRODUCTS, INC. (API)
12157 W LINEBAUGH AVENUE #335
TAMPA, FL 33626
CONTACT: KERRI BEALS
PH (813) 925-0144
WWW.AMERICANPROD.COM

API AMERICAN PRODUCTS, INC.

PROJECT NAME: CW625U UNITIZED CURTAIN WALL SERIES #1

SHEET TITLE: TYPICAL 2 3/4" JAMB MULLION

DRAWN BY: wpa

DATE:

SCALE: 6" = 1'-0"

SHEET #: 4

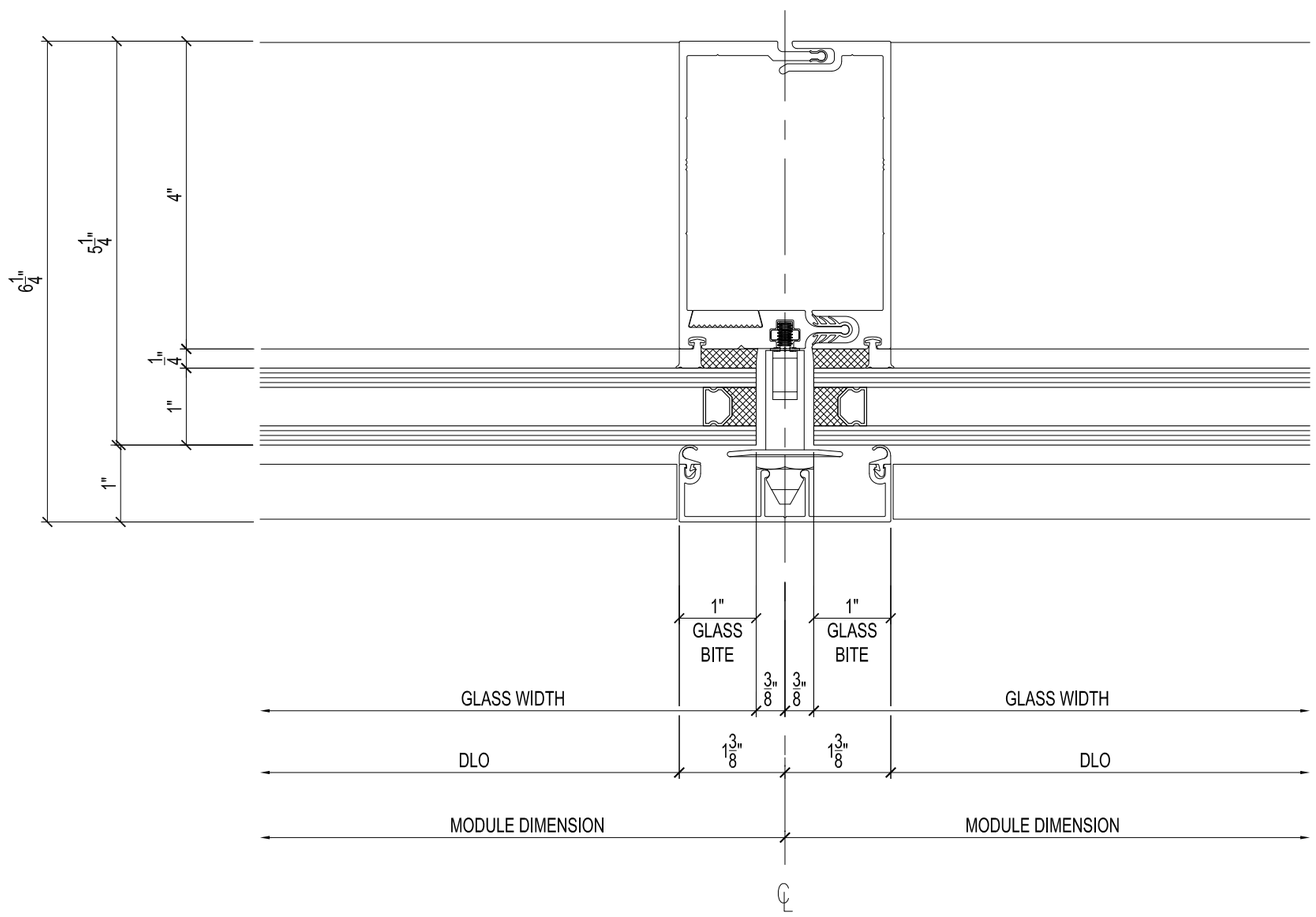

3/5 TYPICAL 2 3/4" MULLION DETAIL @ VISION GLASS

NO.	REVISION	ISSUE DATE	BY

AMERICAN PRODUCTS, INC. (API)
12157 W LINEBAUGH AVENUE #335
TAMPA, FL 33626
CONTACT: KERRI BEALS
PH (813) 925-0144
WWW.AMERICANPROD.COM

API
AMERICAN PRODUCTS, INC.

PROJECT NAME: CW625U UNITIZED CURTAIN WALL SERIES #1

SHEET TITLE: TYPICAL 2 3/4" MULLION DETAIL

DRAWN BY: wpa

DATE:

SCALE: 6" = 1'-0"

SHEET #: 5

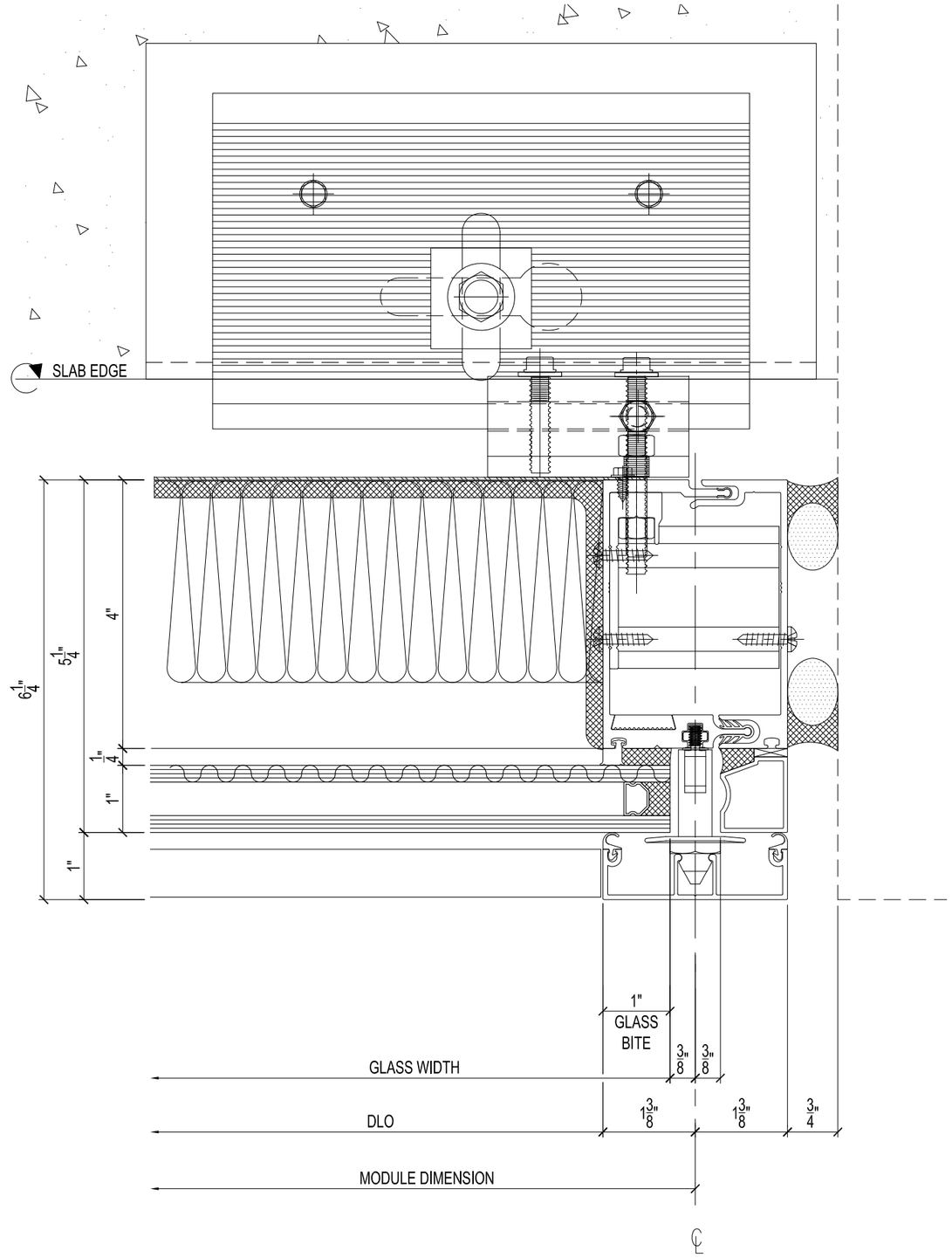

4/6 TYPICAL 2 3/4" JAMB MULLION DETAIL

NO.	REVISION	ISSUE DATE	BY

AMERICAN PRODUCTS, INC. (API)
12157 W LINEBAUGH AVENUE #335
TAMPA, FL 33626
CONTACT: KERRI BEALS
PH (813) 925-0144
WWW.AMERICANPROD.COM

API AMERICAN PRODUCTS, INC.

PROJECT NAME: CW625U UNITIZED CURTAIN WALL SERIES #1

SHEET TITLE: TYPICAL 2 3/4" JAMB MULLION

DRAWN BY: wpa

DATE:

SCALE: 6" = 1'-0"

SHEET #: 6

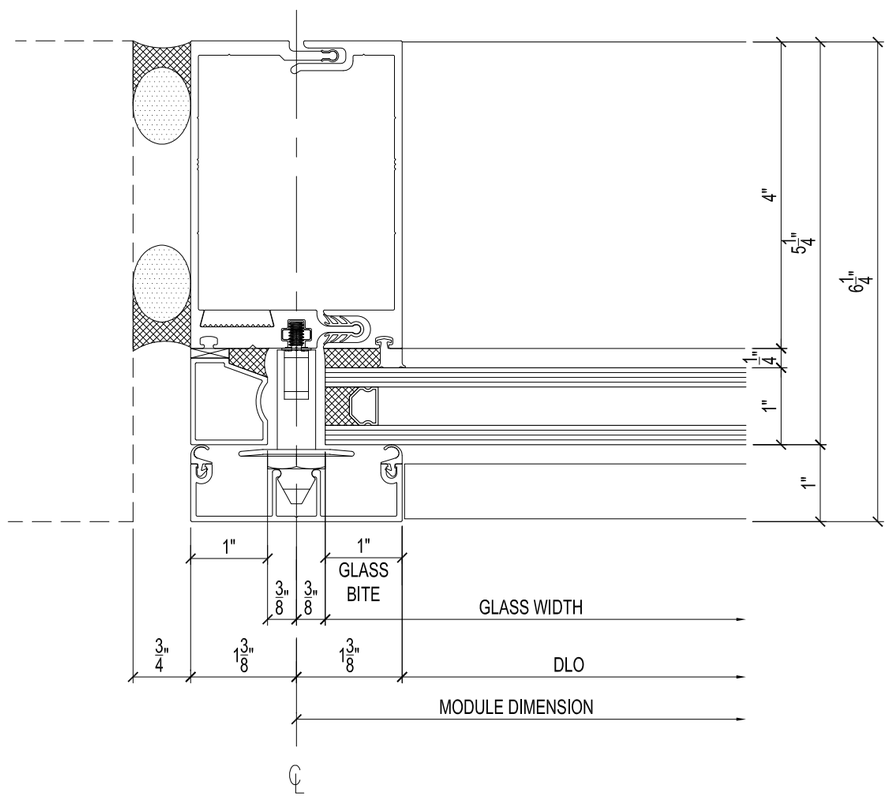

7/7 TYPICAL 2 3/4" JAMB MULLION DETAIL

NO.	REVISION	ISSUE DATE	BY

AMERICAN PRODUCTS, INC. (API)
12157 W LINEBAUGH AVENUE #335
TAMPA, FL 33626
CONTACT: KERRI BEALS
PH (813) 925-0144
WWW.AMERICANPROD.COM

API AMERICAN PRODUCTS, INC.

PROJECT NAME: CW625U UNITIZED CURTAIN WALL SERIES #1

SHEET TITLE: TYPICAL 2 3/4" JAMB MULLION

DRAWN BY: wpa

DATE:

SCALE: 6" = 1'-0"

SHEET #: 7

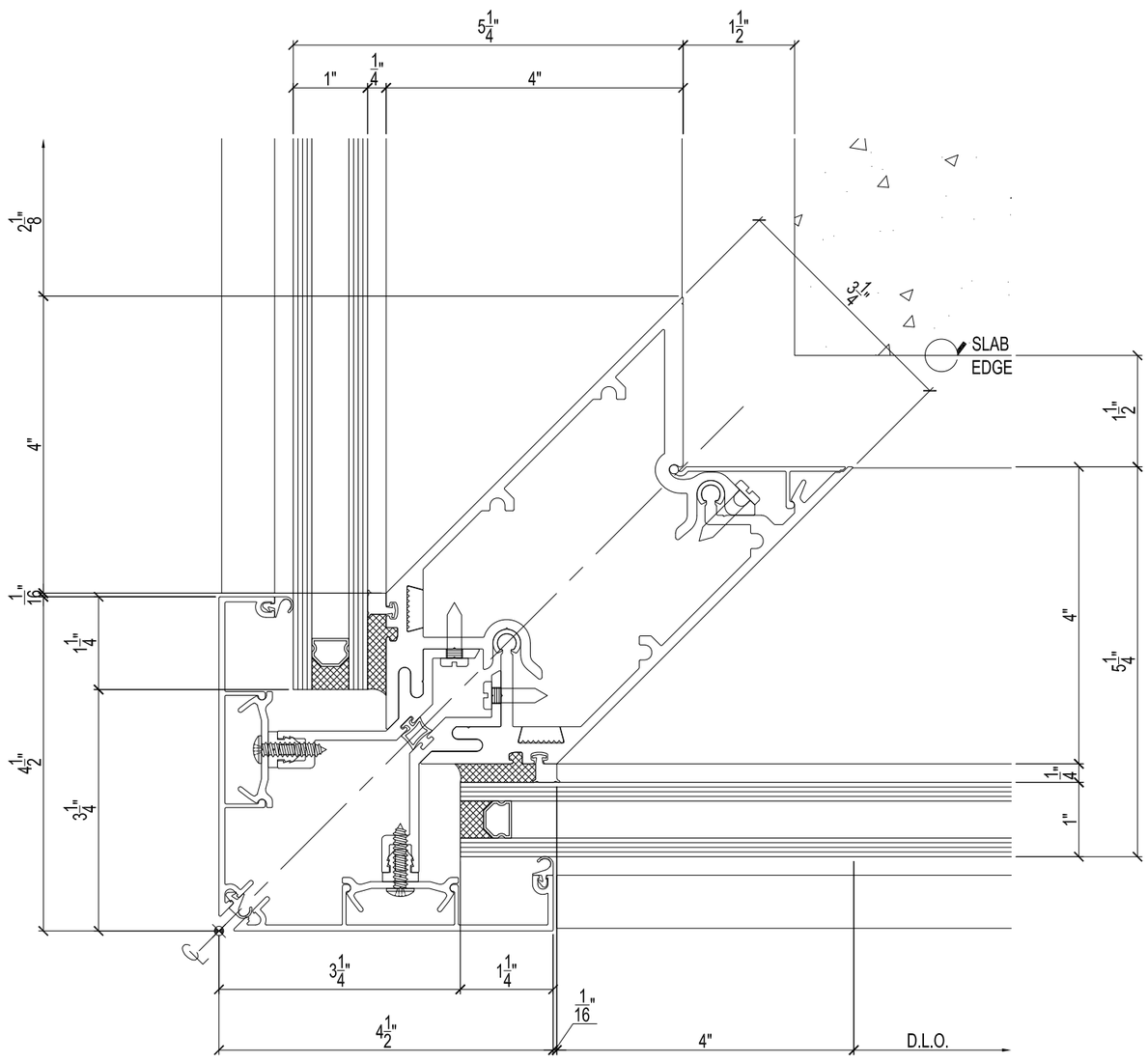

8
8

TYPICAL 90° CAPTURED OUTSIDE CORNER MULLION DETAIL @ VISION AREA

NO.	REVISION	ISSUE DATE	BY

AMERICAN PRODUCTS, INC. (API)
12157 W LINEBAUGH AVENUE #335
TAMPA, FL 33626
CONTACT: KERRI BEALS
PH (813) 925-0144
WWW.AMERICANPROD.COM

API
AMERICAN PRODUCTS, INC.

PROJECT NAME:
CW625U UNITIZED
CURTAIN WALL SERIES #1

SHEET TITLE:
TYPICAL 2 3/4"
90° OUTSIDE CORNER

DRAWN BY:
wpa

DATE:

SCALE:
6" = 1'-0"

SHEET #:
8

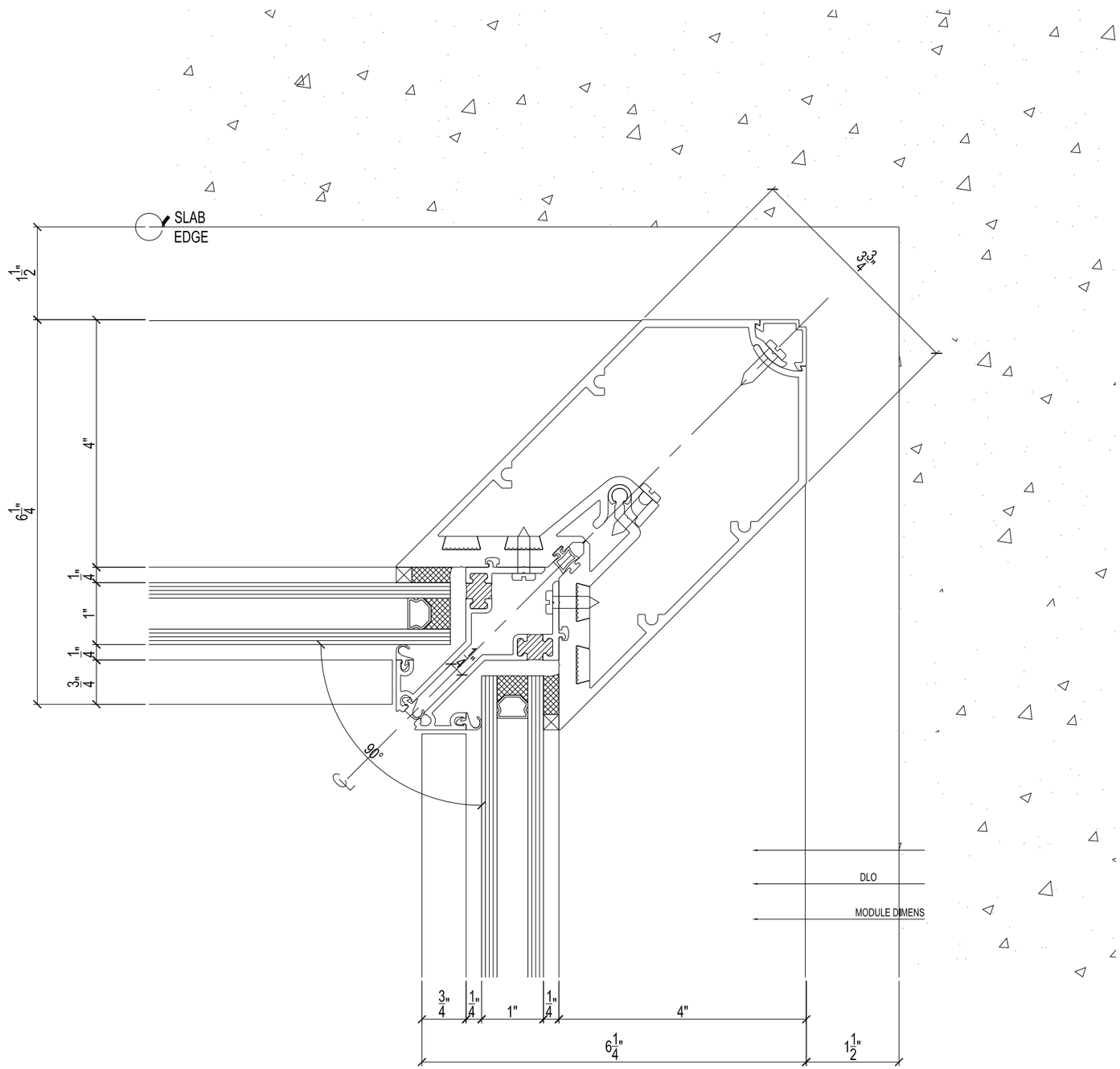

9/9 TYPICAL 90° CAPTURED INSIDE CORNER MULLION DETAIL

NO.	REVISION	ISSUE DATE	BY

AMERICAN PRODUCTS, INC. (API)
12157 W LINEBAUGH AVENUE #335
TAMPA, FL 33626
CONTACT: KERRI BEALS
PH (813) 925-0144
WWW.AMERICANPROD.COM

API AMERICAN PRODUCTS, INC.

PROJECT NAME: CW625U UNITIZED CURTAIN WALL SERIES #1

SHEET TITLE: TYPICAL 2 3/4" 90° INSIDE CORNER MULLION

DRAWN BY: wpa

DATE:

SCALE: 6" = 1'-0"

SHEET #: 9

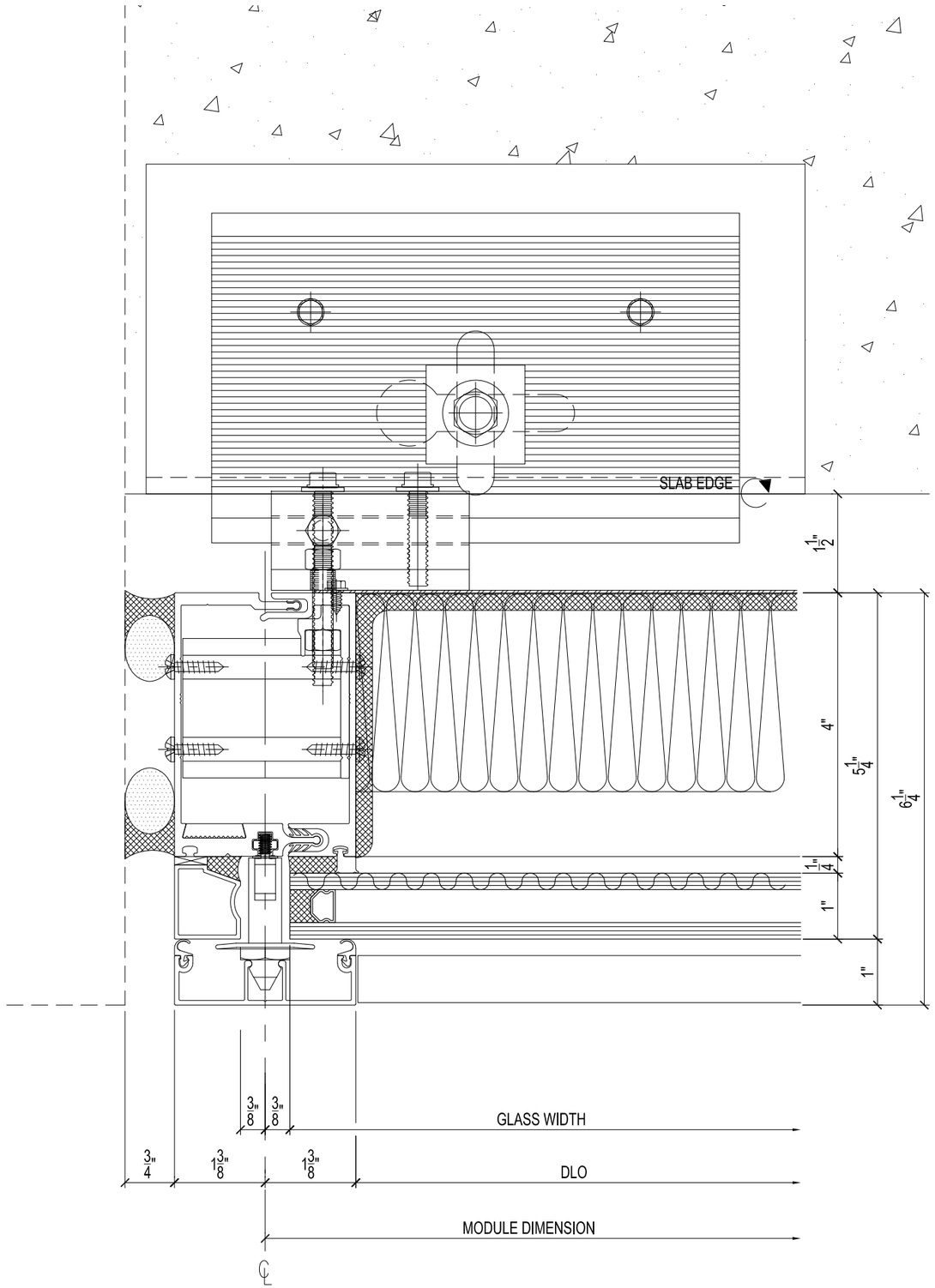

10/10 TYPICAL 2 3/4" JAMB MULLION DETAIL @ SPANDREL GLASS

NO.	REVISION	ISSUE DATE	BY

AMERICAN PRODUCTS, INC. (API)
12157 W LINEBAUGH AVENUE #335
TAMPA, FL 33626
CONTACT: KERRI BEALS
PH (813) 925-0144
WWW.AMERICANPROD.COM

API
AMERICAN PRODUCTS, INC.

PROJECT NAME: CW625U UNITIZED CURTAIN WALL SERIES #1

SHEET TITLE: TYPICAL 2 3/4" JAMB MULLION

DRAWN BY: wpa

DATE:

SCALE: 6" = 1'-0"

SHEET #: 10

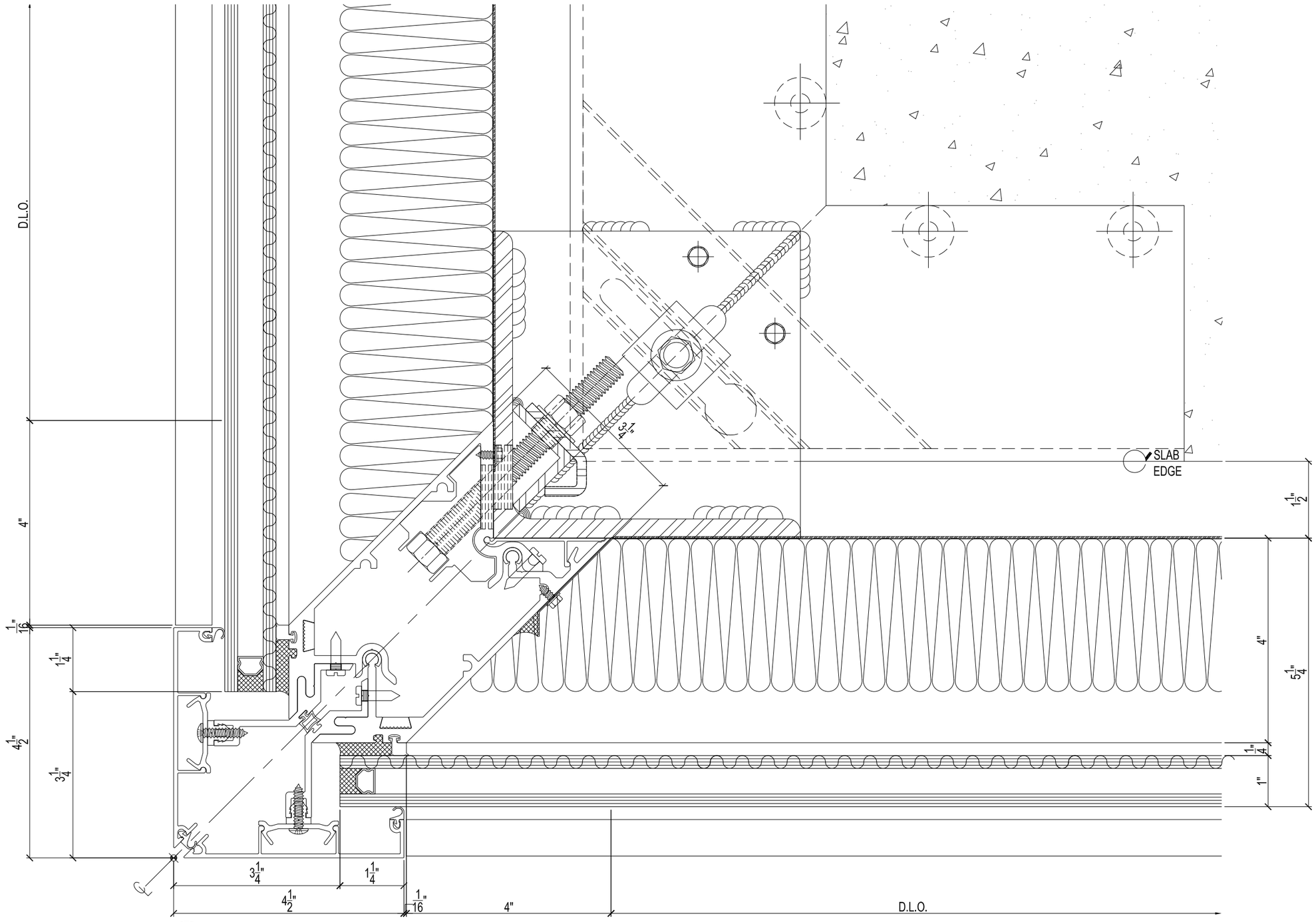

11/11 TYPICAL 90° CAPTURED OUTSIDE CORNER MULLION DETAIL @ ANCHOR

NO.	REVISION	ISSUE DATE	BY

AMERICAN PRODUCTS, INC. (API)
12157 W LINEBAUGH AVENUE #335
TAMPA, FL 33626
CONTACT: KERRI BEALS
PH (813) 925-0144
WWW.AMERICANPROD.COM

API AMERICAN PRODUCTS, INC.

PROJECT NAME: CW625U UNITIZED CURTAIN WALL SERIES #1

SHEET TITLE: TYPICAL 2 3/4" 90° OUTSIDE CORNER

DRAWN BY: wpa

DATE:

SCALE: 6" = 1'-0"

SHEET #: 11

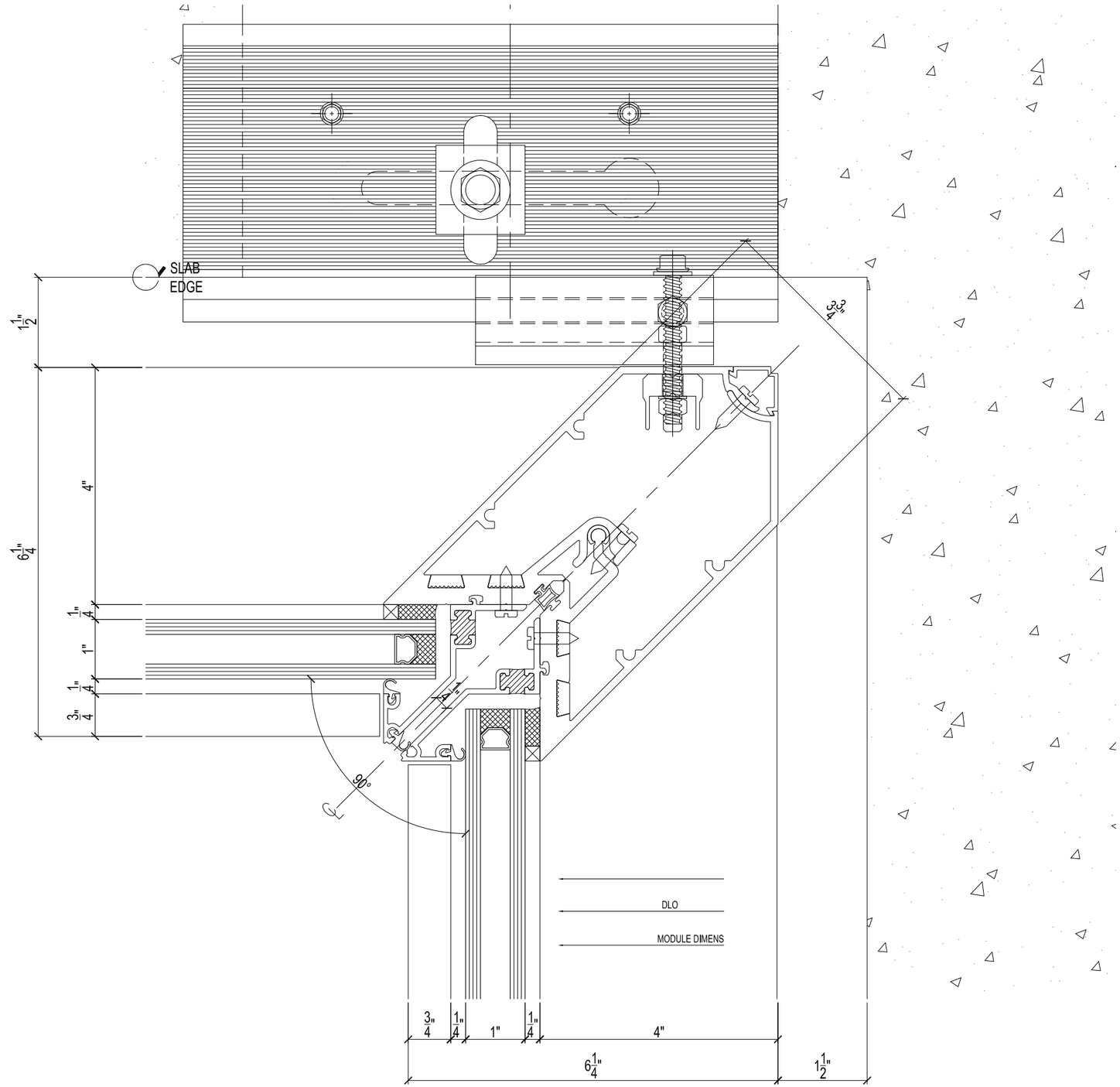

12/12 TYPICAL 90° CAPTURED INSIDE CORNER MULLION @ ANCHOR DETAIL

NO.	REVISION	ISSUE DATE	BY

AMERICAN PRODUCTS, INC. (API)
12157 W LINEBAUGH AVENUE #335
TAMPA, FL 33626
CONTACT: KERRI BEALS
PH (813) 925-0144
WWW.AMERICANPROD.COM

API AMERICAN PRODUCTS, INC.

PROJECT NAME: CW625U UNITIZED CURTAIN WALL SERIES #1

SHEET TITLE: TYPICAL S.S.G. 2 3/4" 90° INSIDE CORNER

DRAWN BY: wpa

DATE:

SCALE: 6" = 1'-0"

SHEET #: 12

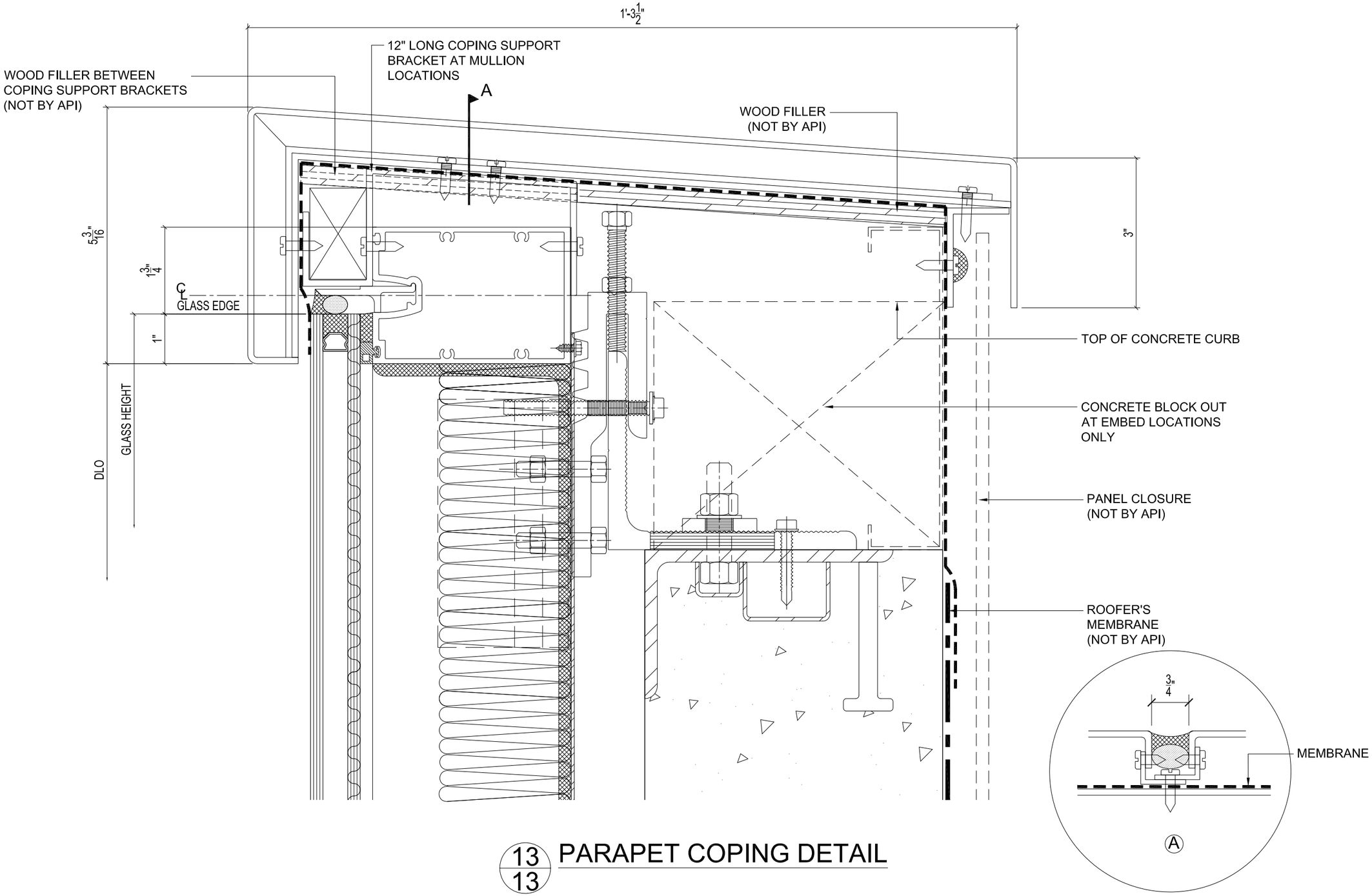

13/13 PARAPET COPING DETAIL

NO.	REVISION	ISSUE DATE	BY

AMERICAN PRODUCTS, INC. (API)
12157 W LINEBAUGH AVENUE #335
TAMPA, FL 33626
CONTACT: KERRI BEALS
PH (813) 925-0144
WWW.AMERICANPROD.COM

API AMERICAN PRODUCTS, INC.

PROJECT NAME: CW625U UNITIZED CURTAIN WALL SERIES #1

SHEET TITLE: TYPICAL 2 3/4" PARAPET COPING SETAIL

DRAWN BY: wpa

DATE:

SCALE: 6" = 1'-0"

SHEET #: 13

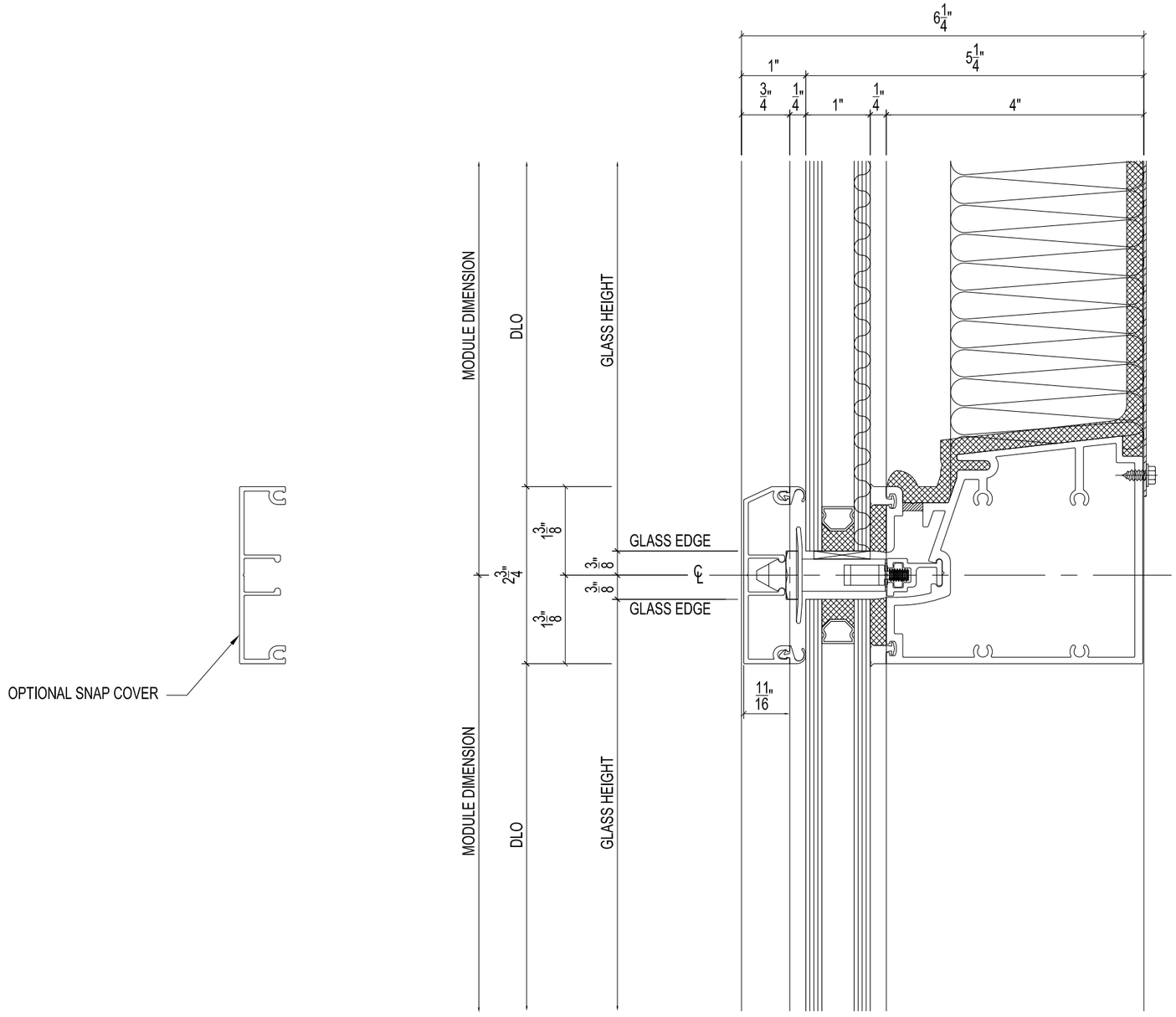

14/14 TYPICAL 2 3/4" HORIZONTAL DETAIL
@ SPANDREL / VISION GLASS

NO.	REVISION	ISSUE DATE	BY

AMERICAN PRODUCTS, INC. (API)
12157 W LINEBAUGH AVENUE #335
TAMPA, FL 33626
CONTACT: KERRI BEALS
PH (813) 925-0144
WWW.AMERICANPROD.COM

API AMERICAN PRODUCTS, INC.

PROJECT NAME: CW625U UNITIZED CURTAIN WALL SERIES #1

SHEET TITLE: TYPICAL 2 3/4" HORIZONTAL DETAIL

DRAWN BY: wpa

DATE:

SCALE: 6" = 1'-0"

SHEET #: 14

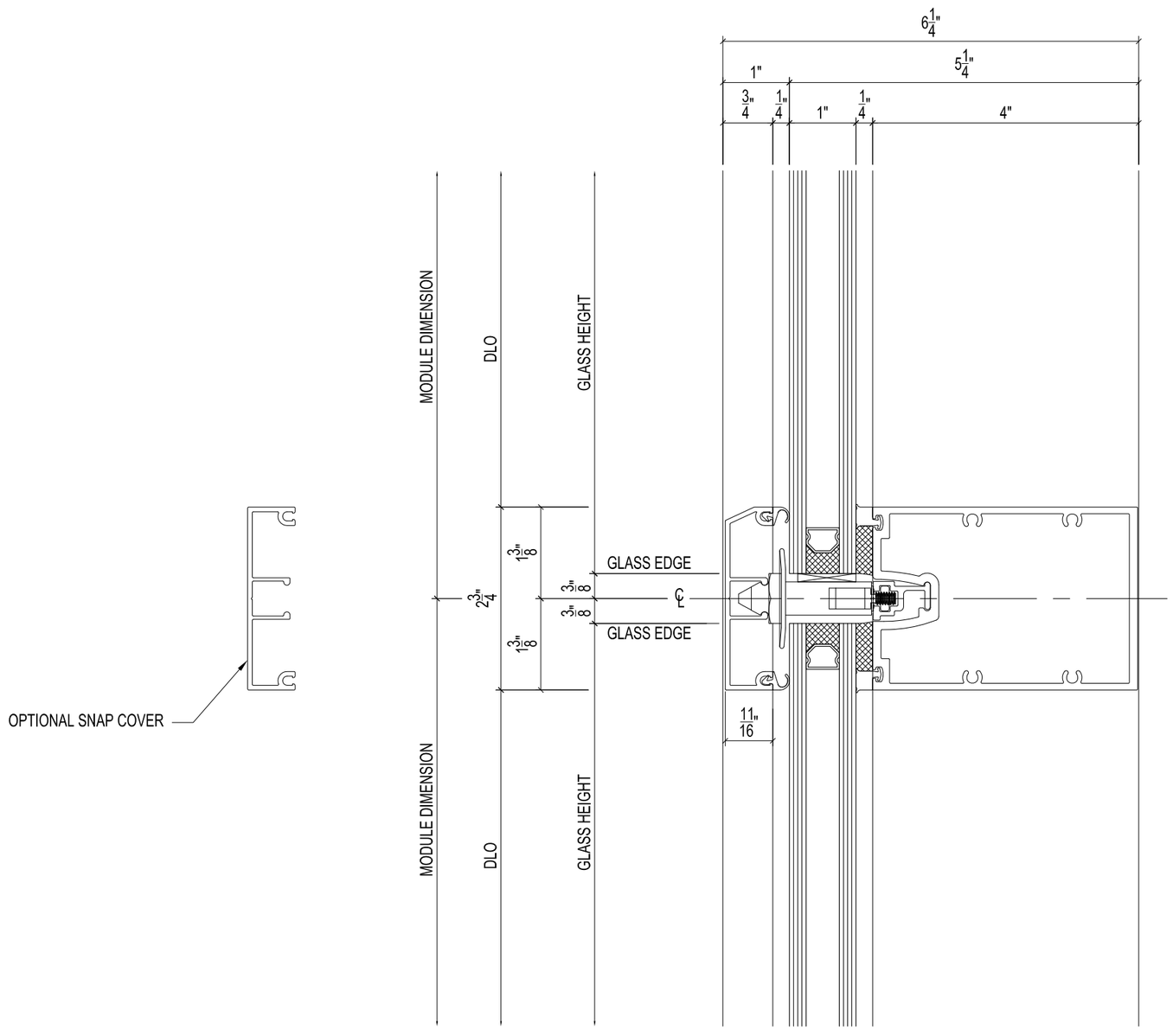

15/15 TYPICAL 2 3/4" HORIZONTAL DETAIL

NO.	REVISION	ISSUE DATE	BY

AMERICAN PRODUCTS, INC. (API)
12157 W LINEBAUGH AVENUE #335
TAMPA, FL 33626
CONTACT: KERRI BEALS
PH (813) 925-0144
WWW.AMERICANPROD.COM

API AMERICAN PRODUCTS, INC.

PROJECT NAME: CW625U UNITIZED CURTAIN WALL SERIES #1

SHEET TITLE: TYPICAL 2 3/4" HORIZONTAL DETAIL

DRAWN BY: wpa

DATE:

SCALE: 6" = 1'-0"

SHEET #: 15

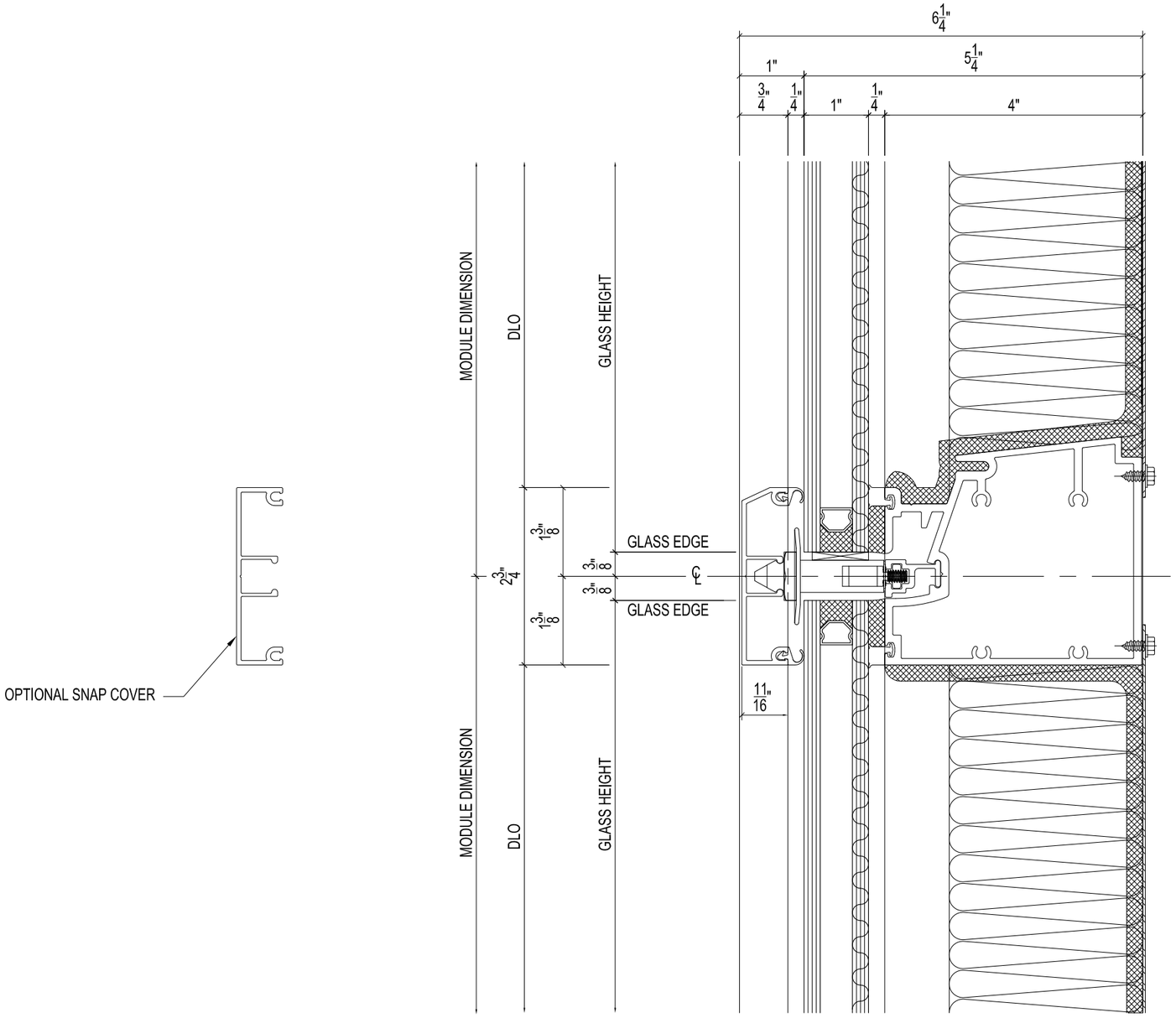

16/16 TYPICAL 2 3/4" HORIZONTAL DETAIL @ SPANDREL GLASS

NO.	REVISION	ISSUE DATE	BY

AMERICAN PRODUCTS, INC. (API)
12157 W LINEBAUGH AVENUE #335
TAMPA, FL 33626
CONTACT: KERRI BEALS
PH (813) 925-0144
WWW.AMERICANPROD.COM

API AMERICAN PRODUCTS, INC.

PROJECT NAME: CW625U UNITIZED CURTAIN WALL SERIES #1

SHEET TITLE: TYPICAL 2 3/4" HORIZONTAL DETAIL

DRAWN BY: wpa

DATE:

SCALE: 6" = 1'-0"

SHEET #: 16

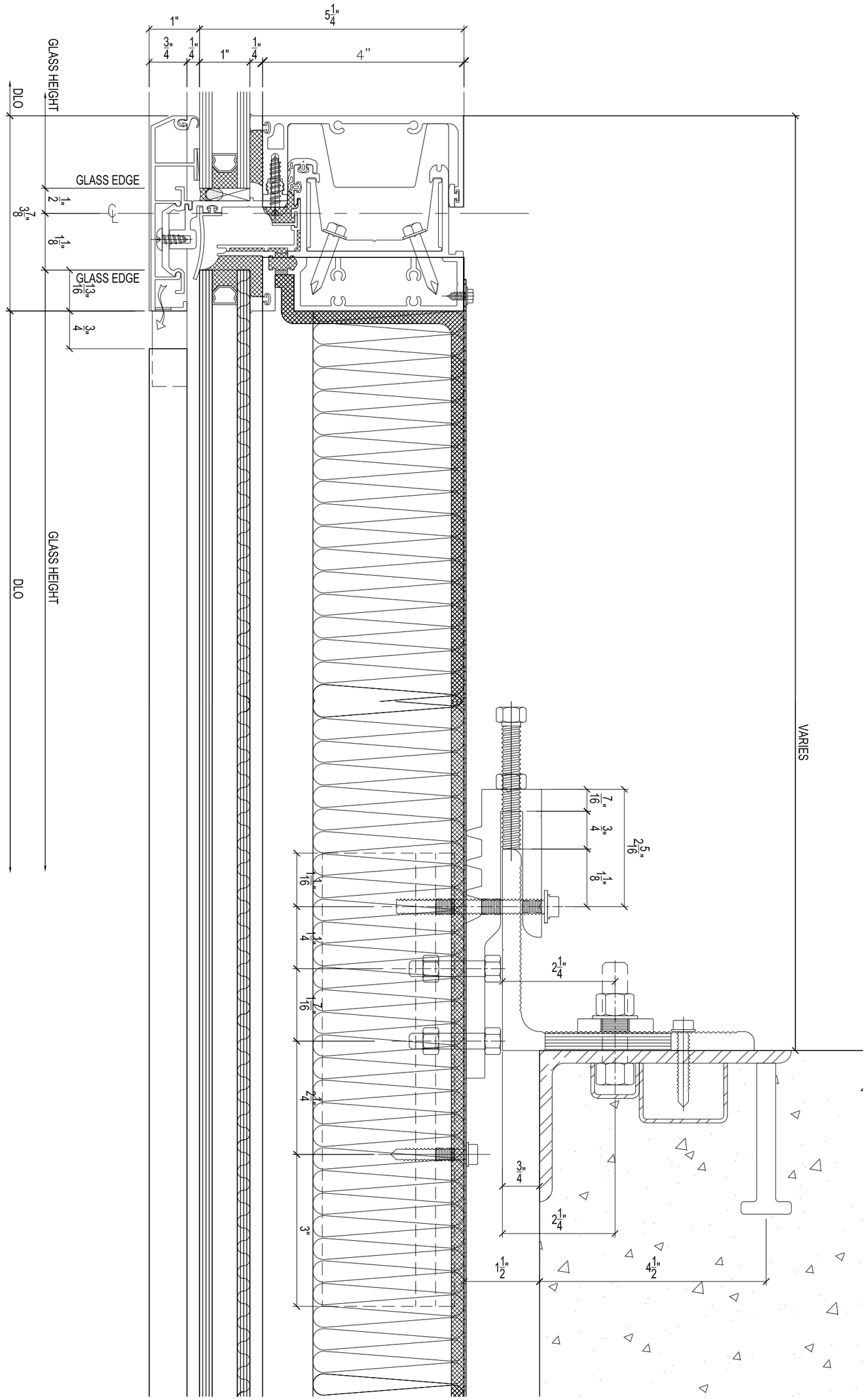

17/17 TYPICAL 3 7/8" STACK JOINT DETAIL

SHEET #: 17	SCALE: 6" = 1'-0"	DATE:	DRAWN BY: wpa	PROJECT NAME: CW625U UNITIZED CURTAIN WALL SERIES #1	API AMERICAN PRODUCTS, INC.	AMERICAN PRODUCTS, INC. (API) 12157 W LINEBAUGH AVENUE #335 TAMPA, FL 33626 CONTACT: KERRI BEALS PH (813) 925-0144 WWW.AMERICANPROD.COM	NO.	REVISION / ISSUE DATE / BY
				SHEET TITLE: TYPICAL 3 7/8" STACK JOINT				

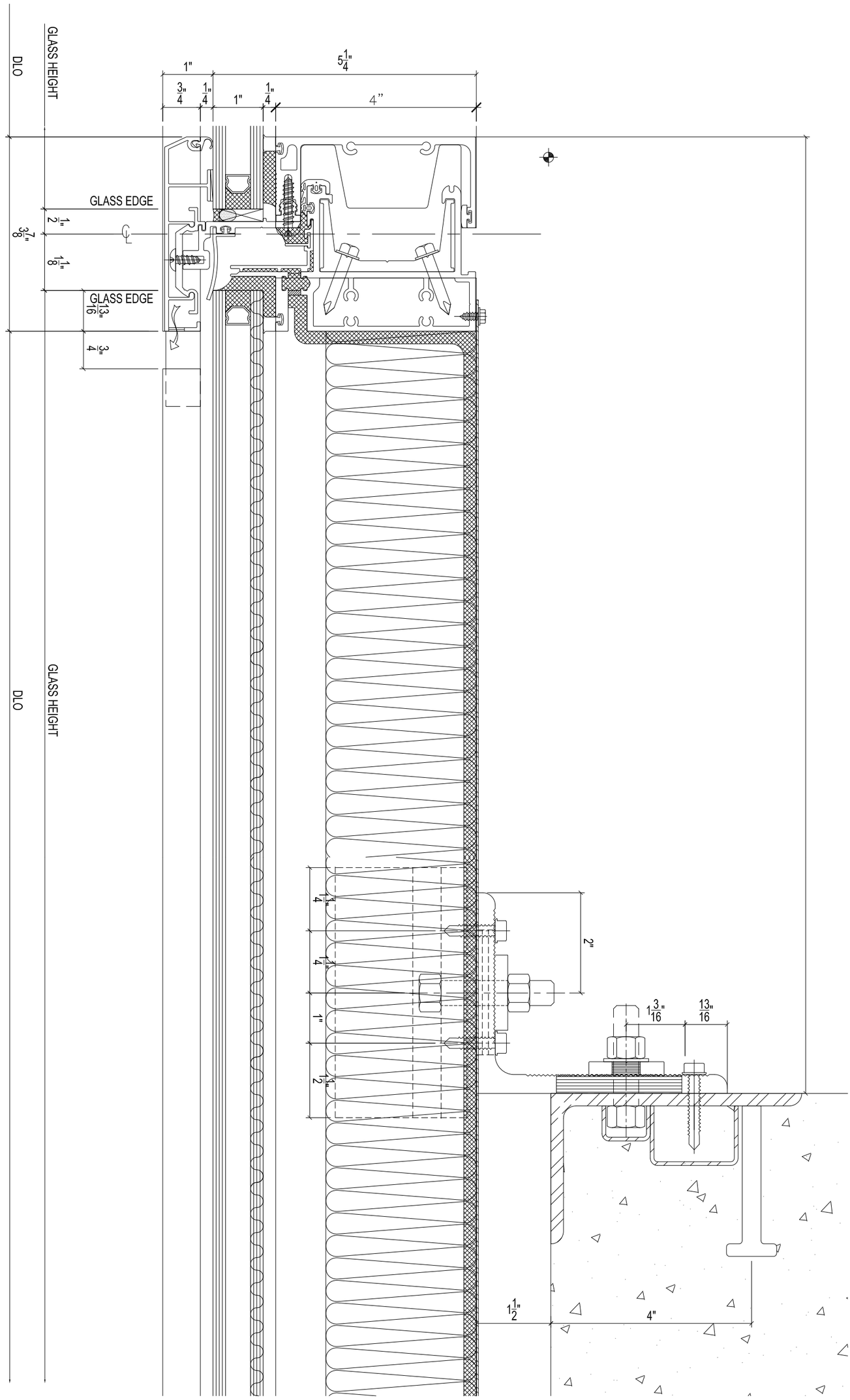

18/18 TYPICAL 3 7/8" SLIP CONNECTION DETAIL

SHEET #: 18	SCALE: 6" = 1'-0"	DATE:	DRAWN BY: wpa	PROJECT NAME: CW625U UNITIZED CURTAIN WALL SERIES #1	SHEET TITLE: TYPICAL 3 7/8" STACK JOINT	API AMERICAN PRODUCTS, INC.	AMERICAN PRODUCTS, INC. (API) 12157 W LINEBAUGH AVENUE #335 TAMPA, FL 33626 CONTACT: KERRI BEALS PH (813) 925-0144 WWW.AMERICANPROD.COM	NO. / REVISION / ISSUE DATE / BY

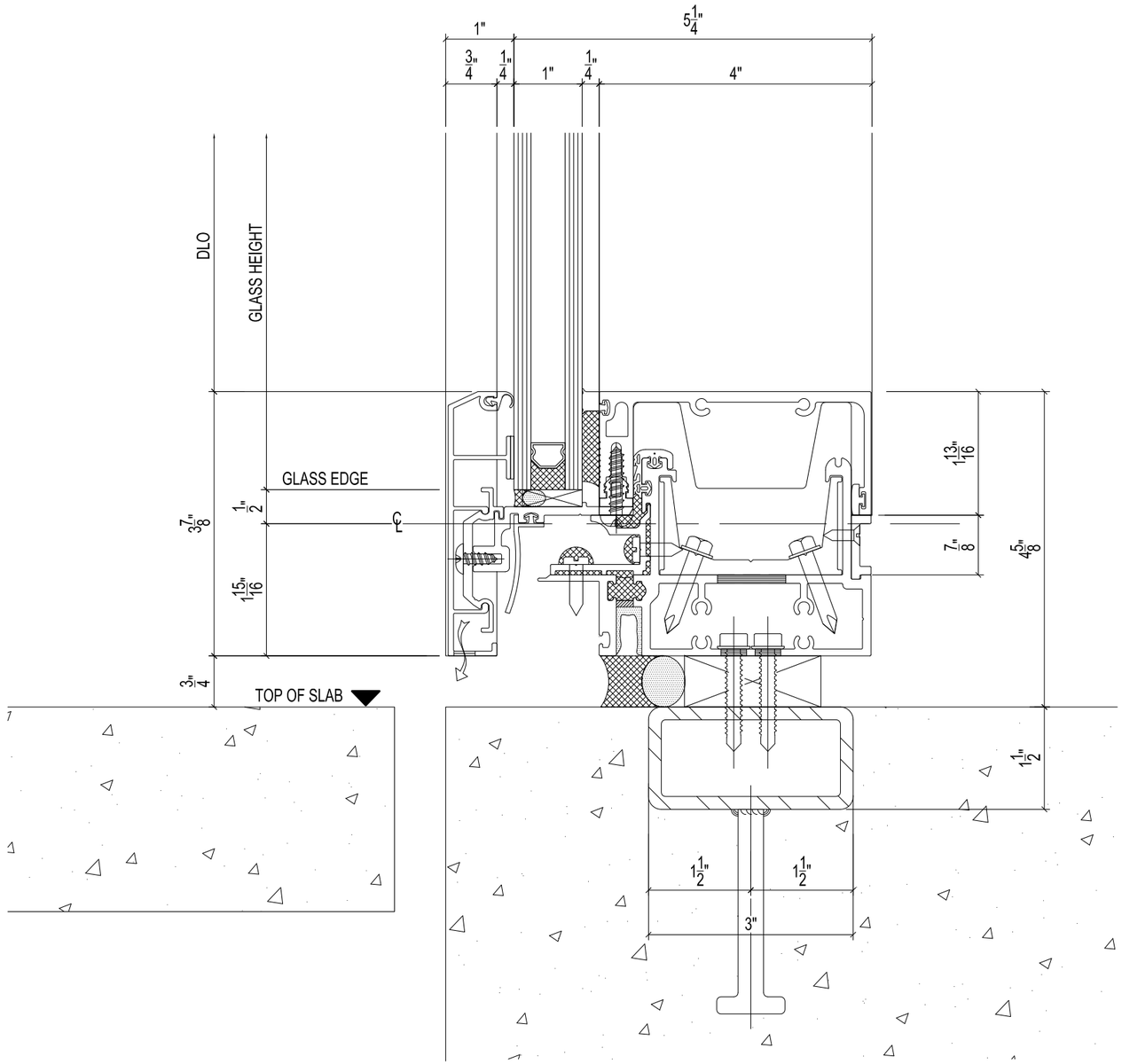

19/19 TYPICAL 3 7/8" HARD STACK SILL DETAIL

NO.	REVISION	ISSUE DATE	BY

AMERICAN PRODUCTS, INC. (API)
12157 W LINEBAUGH AVENUE #335
TAMPA, FL 33626
CONTACT: KERRI BEALS
PH (813) 925-0144
WWW.AMERICANPROD.COM

API AMERICAN PRODUCTS, INC.

PROJECT NAME: CW625U UNITIZED CURTAIN WALL SERIES #1

SHEET TITLE: TYPICAL 3 7/8" HARD STACK SILL DETAIL

DRAWN BY: wpa

DATE:

SCALE: 6" = 1'-0"

SHEET #: 19

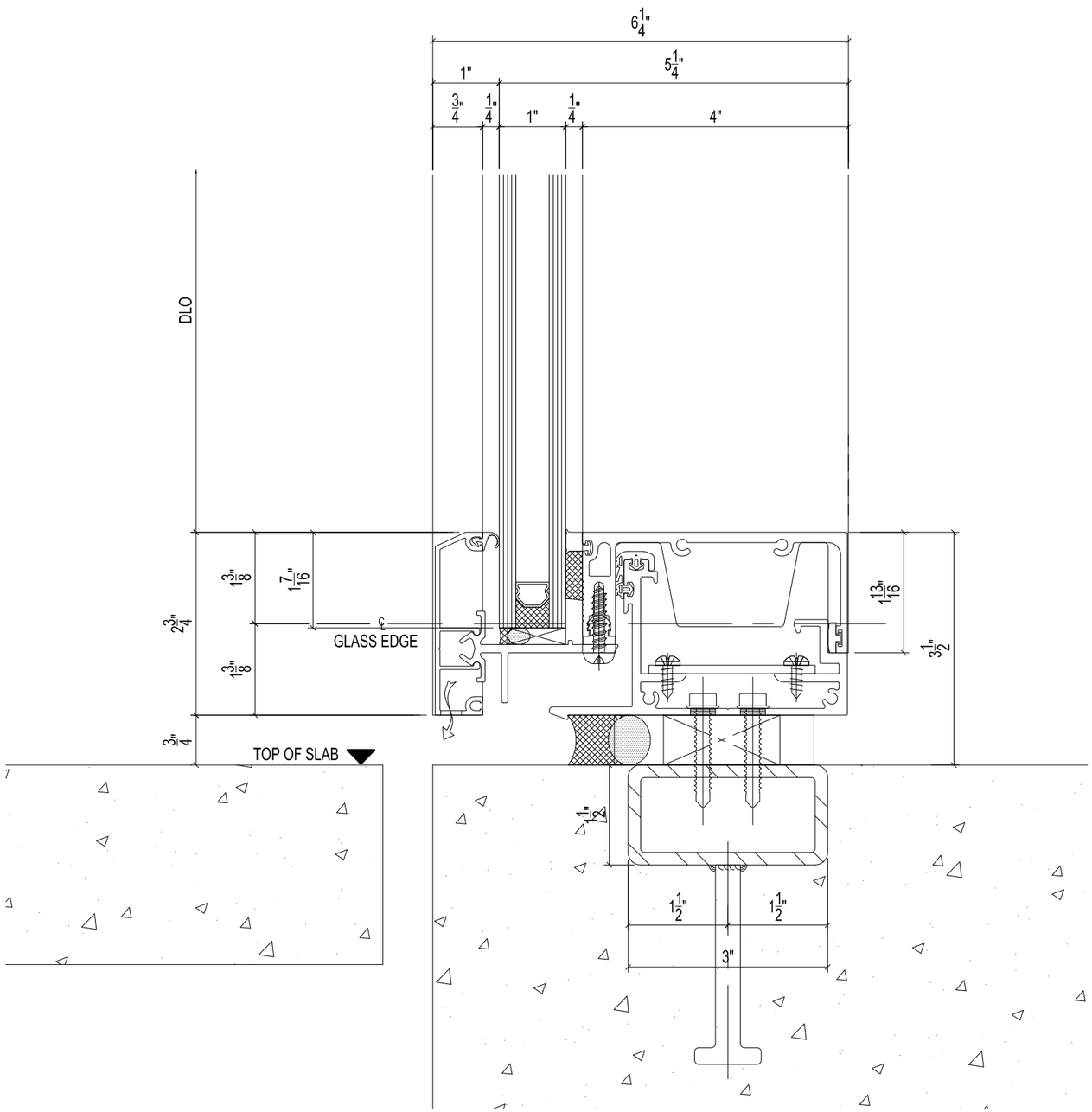

20/20 2 3/4" HARD STACK SILL DETAIL

NO.	REVISION	ISSUE DATE	BY

AMERICAN PRODUCTS, INC. (API)
12157 W LINEBAUGH AVENUE #335
TAMPA, FL 33626
CONTACT: KERRI BEALS
PH (813) 925-0144
WWW.AMERICANPROD.COM

AMERICAN PRODUCTS, INC.

PROJECT NAME: CW625U UNITIZED CURTAIN WALL SERIES #1

SHEET TITLE: TYPICAL 2 3/4" HARD STACK SILL

DRAWN BY: wpa

DATE:

SCALE: 6" = 1'-0"

SHEET #: 20

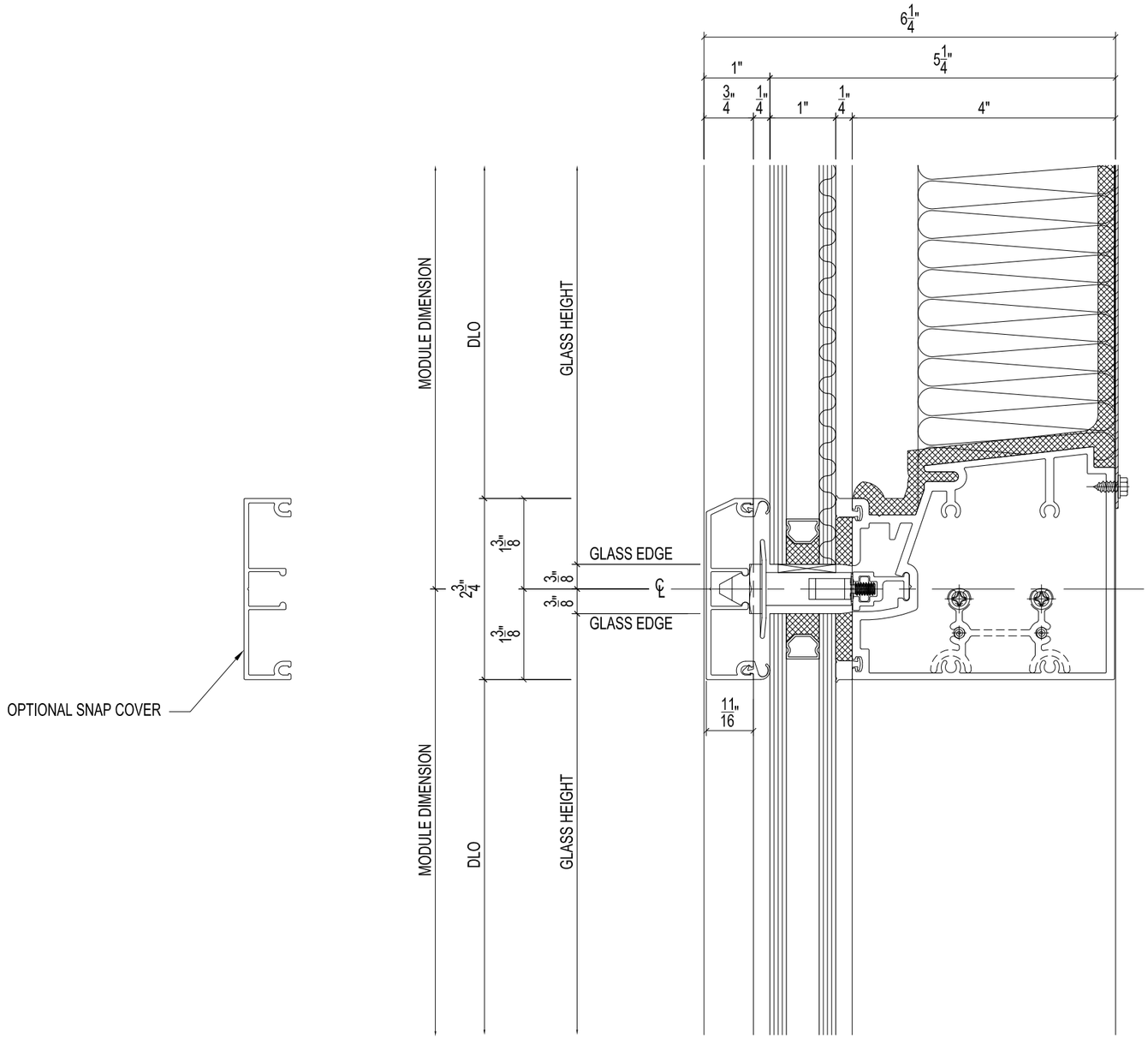

21/21 TYPICAL 2 3/4" HORIZONTAL DETAIL @ SPANDREL GLASS W/ SPACER @ JAMB CONDITION

NO.	REVISION	ISSUE DATE	BY

AMERICAN PRODUCTS, INC. (API)
12157 W LINEBAUGH AVENUE #335
TAMPA, FL 33626
CONTACT: KERRI BEALS
PH (813) 925-0144
WWW.AMERICANPROD.COM

API AMERICAN PRODUCTS, INC.

PROJECT NAME: CW625U UNITIZED CURTAIN WALL SERIES #1

SHEET TITLE: TYPICAL 2 3/4" @ SPANDREL GLASS

DRAWN BY: wpa

DATE:

SCALE: 6" = 1'-0"

SHEET #: 21

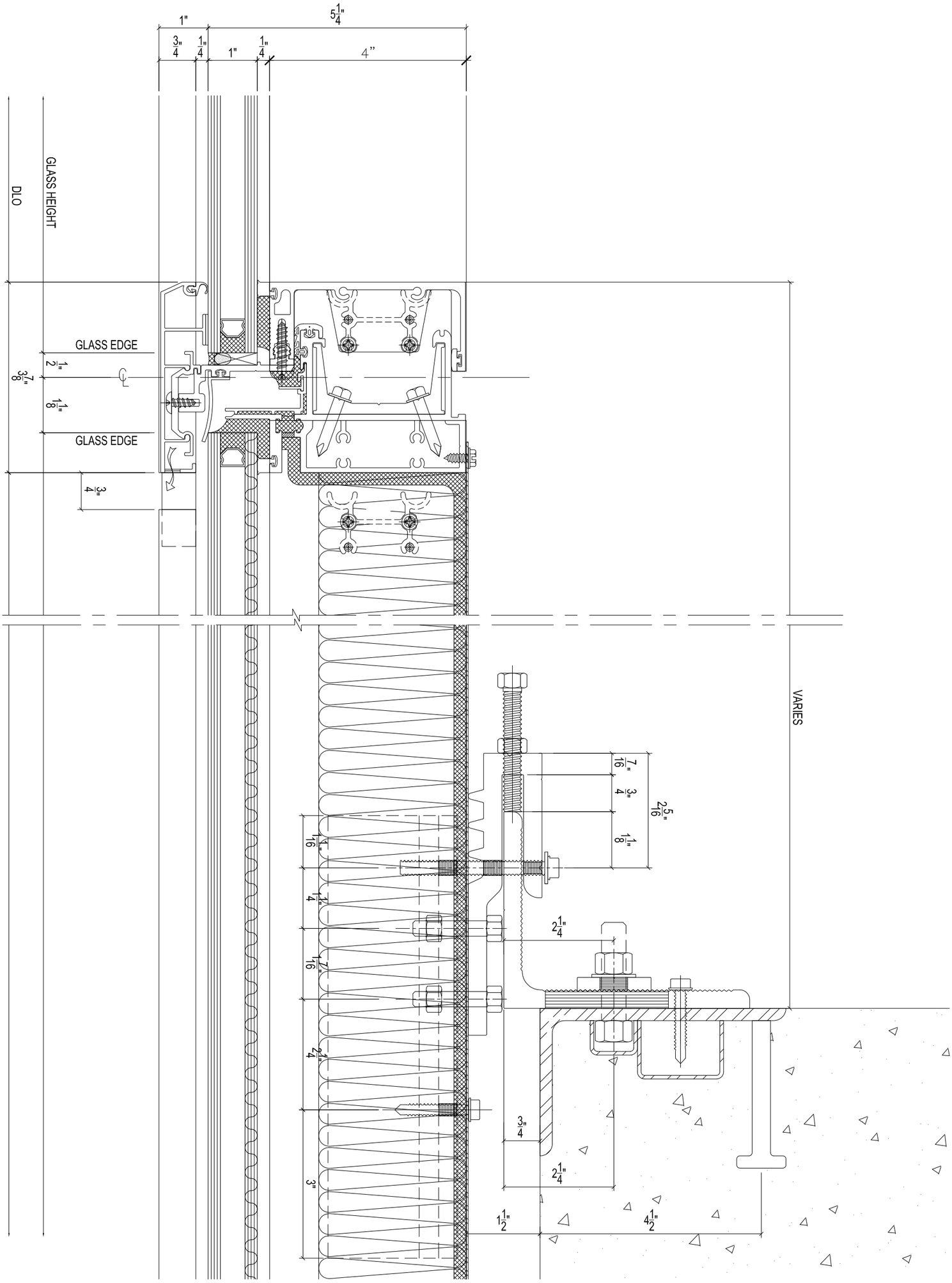

22/22 TYPICAL 3 7/8" STACK JOINT DETAIL W/ SPACER @ JAMB CONDITION

SHEET #: 22	SCALE: 6" = 1'-0"	DATE:	DRAWN BY: wpa	PROJECT NAME: CW625U UNITIZED CURTAIN WALL SERIES #1	API AMERICAN PRODUCTS, INC.	AMERICAN PRODUCTS, INC. (API) 12157 W LINEBAUGH AVENUE #335 TAMPA, FL 33626 CONTACT: KERRI BEALS PH (813) 925-0144 WWW.AMERICANPROD.COM	NO. / REVISION / ISSUE DATE / BY	
				SHEET TITLE: TYPICAL 3 7/8" STACK JOINT DETAIL W/ SPACER AT JAMB				

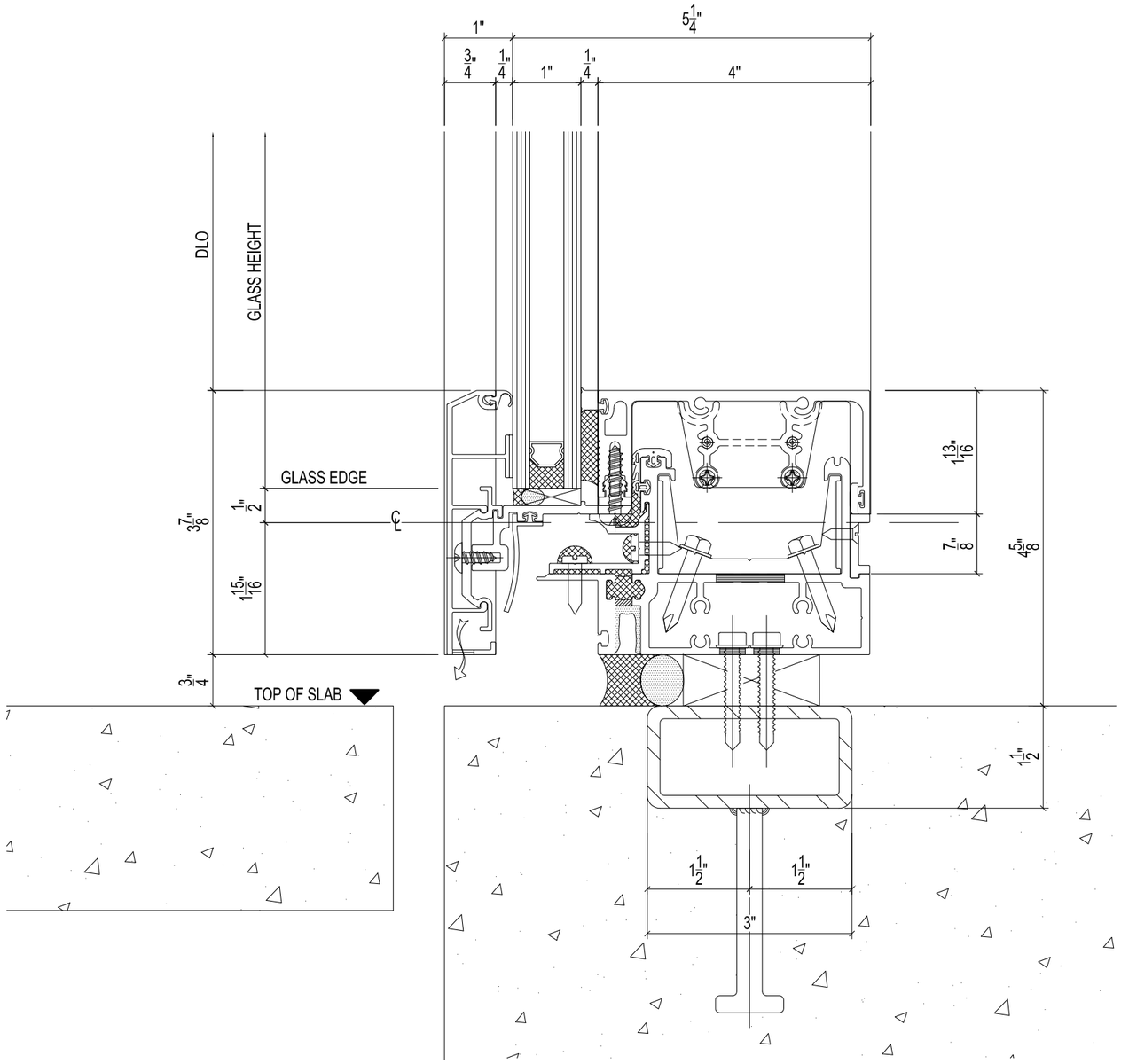

23/23 TYPICAL 3 7/8" HARD STACK JOINT DETAIL W/ SPACER @ JAMB CONDITION

NO.	REVISION	ISSUE DATE	BY

AMERICAN PRODUCTS, INC. (API)
12157 W LINEBAUGH AVENUE #335
TAMPA, FL 33626
CONTACT: KERRI BEALS
PH (813) 925-0144
WWW.AMERICANPROD.COM

API AMERICAN PRODUCTS, INC.

PROJECT NAME: CW625U UNITIZED CURTAIN WALL SERIES #1

SHEET TITLE: TYPICAL 3 7/8" HARD STACK JOINT

DRAWN BY: wpa

DATE:

SCALE: 6" = 1'-0"

SHEET #: 23

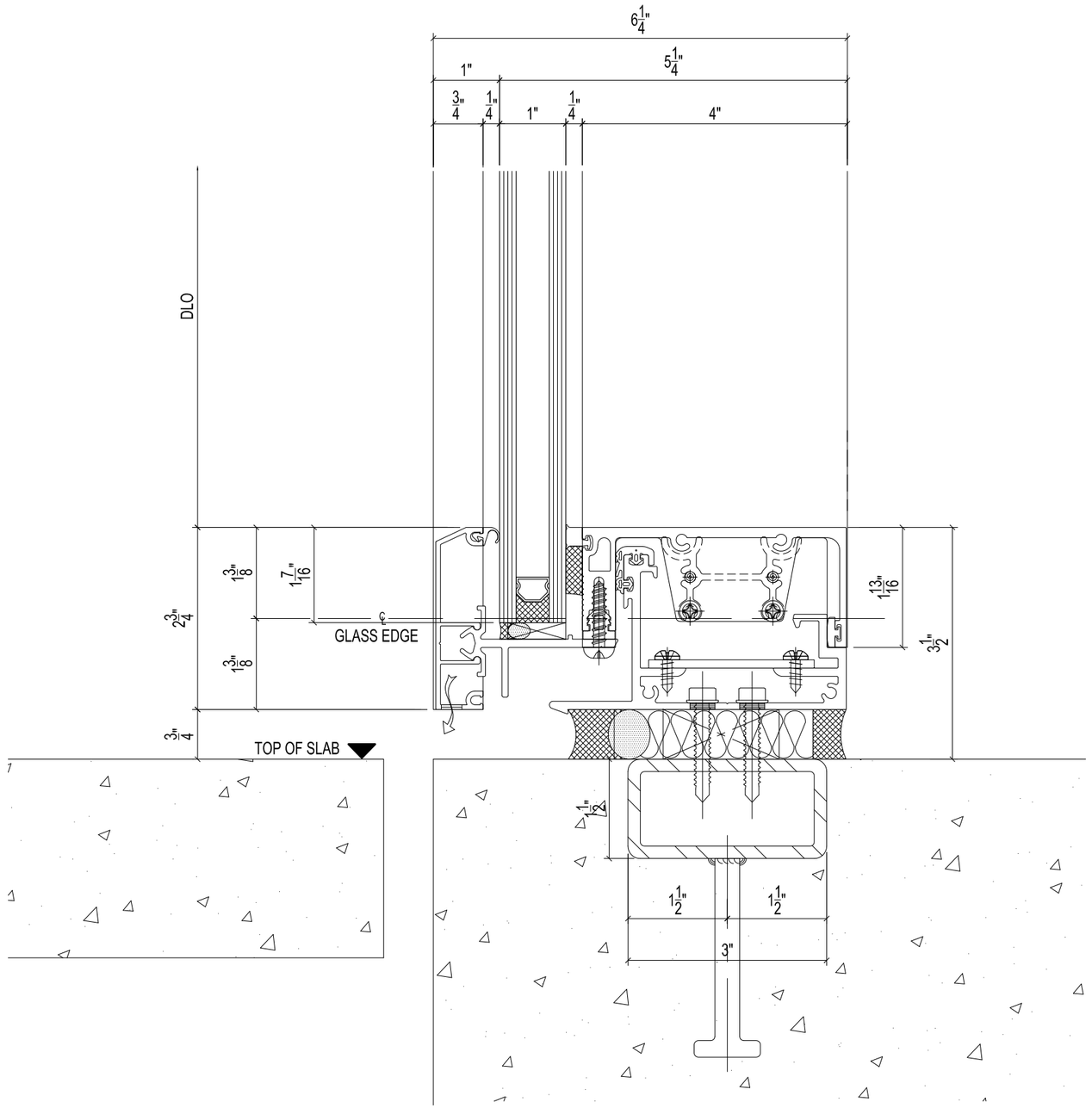

24/24 2 3/4" HARD STACK SILL DETAIL W/SPACER @ JAMB CONDITION

NO.	REVISION	ISSUE DATE	BY

AMERICAN PRODUCTS, INC. (API)
12157 W LINEBAUGH AVENUE #335
TAMPA, FL 33626
CONTACT: KERRI BEALS
PH (813) 925-0144
WWW.AMERICANPROD.COM

API AMERICAN PRODUCTS, INC.

PROJECT NAME: CW625U UNITIZED CURTAIN WALL SERIES #1

SHEET TITLE: TYPICAL 2 3/4" HARD STACK SILL

DRAWN BY: wpa

DATE:

SCALE: 6" = 1'-0"

SHEET #: 24

Material:
Hard PVC

Description:
Stack Horizontal
Spacer Gasket

Material:
70 Durometer light
Gray / Black Silicone

Description:
Exterior Glazing
Gasket

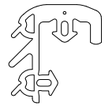

Material:
Black 60 Durometer
EPDM

Description:
3 7/8" Stack
Horizontal Head/Sill
Track Air Seal Gasket

Material:
Black 85 Durometer
EPDM

Description:
3 7/8" Stack Horizontal
Thermal Break Gasket

Material:
Santoprene

Description:
2 3/4" Mullion Airseal
Gasket

Material:
Rigid PVC

Description:
Mullion Engagement
spacer gasket

Material:
EPDM Black

Description:
Outside corner mullion
airseal gasket

Material:
PVC

Description:
Outside corner male
mullion engagement PVC

Material:
Gray 70 Durometer Silicone
Black 70 Durometer Silicone

Description:
Stack Horizontal
Exterior Wiper Gasket
(captured)

Material:
Gray 70 Durometer Silicone
Black 70 Durometer Silicone

Description:
Stack Horizontal
Exterior Wiper Gasket
(SSG)

Material:
85 Durometer Light gray Silicone
85 Durometer Black Silicone

Description:
1/4" Thk. glazing
Setting block

Material:
85 Durometer Light gray Silicone
85 Durometer Black Silicone

Description:
1/8" Thk. glazing
Setting block

Material:
Gray 70 Durometer Silicone
Black 70 Durometer Silicone

Description:
Exterior 3/4" Glazing Joint Gasket

Material:
EPDM Gray/Black

Description:
Interior Glazing Gasket

Material:
PVC

Description:
Spacer for buttons
Insert into V1

2 3/4" Horizontal
Snap Cover Adaptor
Alloy: 6063-T5

2 3/4" SSG glass
support adaptor
Alloy: 6063-T5

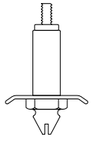

Button insert
(Exterior snap cover adaptor)

Snap Cover Holder
Alloy: 6063-T5

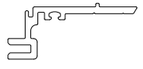

Support Adaptor for 1" Glass
Alloy: 6063-T5

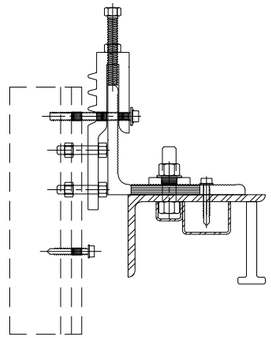

Typical Anchor at Stack Joint

Typical 2 3/4" Male
Mullion 4" Deep
Alloy: 6063-T6

Typical 2 3/4" Male
Mullion 4" Deep
Alloy: 6063-T6

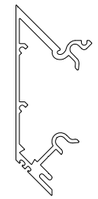

Typical Outside 90°
female corner mullion
Alloy: 6063-T6

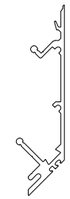

Typical Outside 90°
male corner mullion
Alloy: 6063-T6

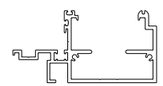

3 7/8" Male Hard Stack
For Balcony 4" Deep
Alloy: 6063-T6

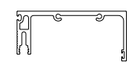

3 7/8" Female Stack
Joint Sill - 4" deep
Alloy: 6063-T6

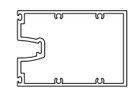

Typical 2 3/4" Horizontal
4" Deep
Alloy: 6063-T6

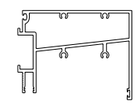

5 5/16" Female Stack
Joint Sill - 4" deep
Alloy: 6063-T6

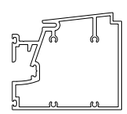

2 3/4" Sloped Horizontal
for Spandrel 4" deep
Alloy: 6063-T6

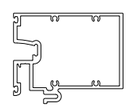

2 3/4" Horizontal for
Balcony Spandrel- 4" deep
Alloy: 6063-T6

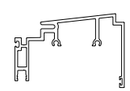

3 7/8" Female Stack
Sill for Balcony
Spandrel 4" deep
Alloy: 6063-T6

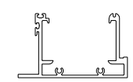

2 9/16" Hard Stack
Sill Starter Track 4" deep
Alloy: 6063-T5

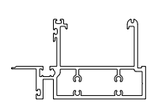

3 7/8" Male Stack
Joint Head 4" deep
Alloy: 6063-T6

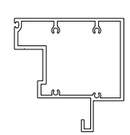

Int. horizontal
operable vent head
Alloy: 6063-T6

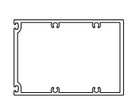

2 3/4" Head
Member 4" deep
Alloy: 6063-T6

NO.	REVISION	ISSUE DATE	BY

AMERICAN PRODUCTS, INC. (API)
12157 W LINEBAUGH AVENUE #335
TAMPA, FL 33626
CONTACT: KERRI BEALS
PH (813) 925-0144
WWW.AMERICANPROD.COM

API
AMERICAN PRODUCTS, INC.

PROJECT NAME:
CW625U UNITIZED
CURTAIN WALL SERIES #1

SHEET TITLE:
TYPICAL
PARTS LIST

DRAWN BY:
wpa

DATE:

SCALE:
6" = 1'-0"

SHEET #:
25